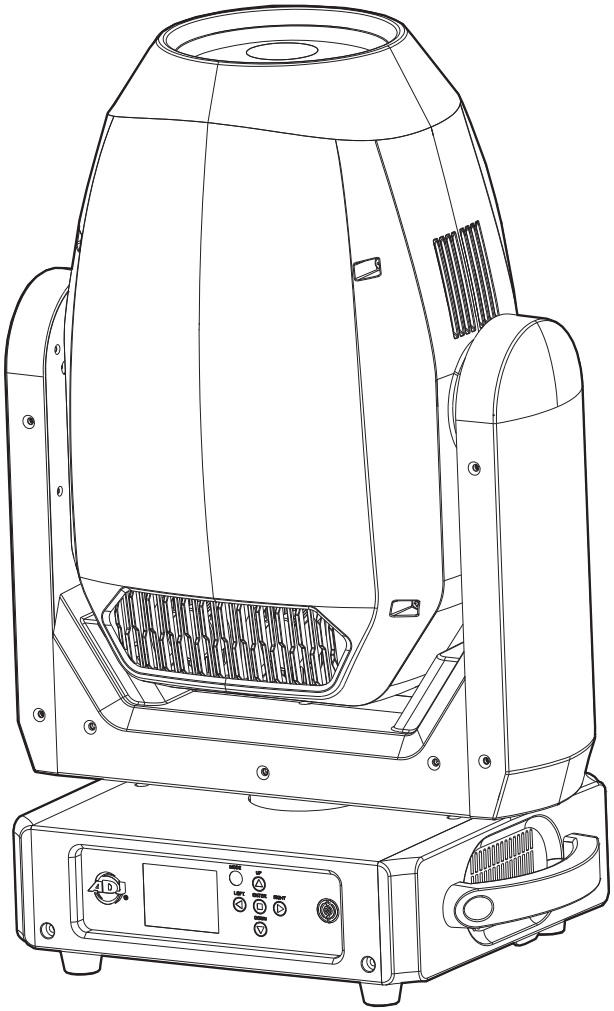

PROTÉGÉ
XM
User Manual

©2026 ADJ Products, LLC all rights reserved. Information, specifications, diagrams, images, and instructions herein are subject to change without notice. ADJ Products, LLC logo and identifying product names and numbers herein are trademarks of ADJ Products, LLC. Copyright protection claimed includes all forms and matters of copyrightable materials and information now allowed by statutory or judicial law or hereinafter granted. Product names used in this document may be trademarks or registered trademarks of their respective companies and are hereby acknowledged. All non-ADJ Products, LLC brands and product names are trademarks or registered trademarks of their respective companies.

ADJ Products, LLC and all affiliated companies hereby disclaim any and all liabilities for property, equipment, building, and electrical damages, injuries to any persons, and direct or indirect economic loss associated with the use or reliance of any information contained within this document, and/or as a result of the improper, unsafe, insufficient and negligent assembly, installation, rigging, and operation of this product.

ADJ PRODUCTS LLC World Headquarters
6122 S. Eastern Ave. I Los Angeles, CA 90040 USA
Tel: 800-322-6337 I Fax: 323-582-2941 I www.adj.com Isupport@adj.com

ADJ Supply Europe B.V.
ADJ SERVICE EUROPE - Monday - Friday 08:30 to 17:00 CET
Junostraat 2 I 6468 EW Kerkrade I Netherlands
+31 45 546 85 60 I Fax: +31 45 546 85 96 I support@adj.eu

DOCUMENT VERSION

Due to additional product features and/or enhancements, an updated version of this document may be available online.
Please check www.adj.com for the latest revision/update of this manual before beginning installation and/or programming.

Date	Document Version	Software Version	DMX Channels	Notes
02/16/26	1.0	1.0	29 / 35 / 43 Ch	Initial Release
09/24/26	1.1	N/A	N/A	Update System Menu & DMX Traits

CONTENTS

Information	4
Features	6
Safety Guidelines	7
Overview	9
Gobos, Colors, and Effects	10
Gobo Replacement	11
Installation Guidelines	14
Aria Setup and Guidelines	18
Near Field Communication (NFC)	21
System Menu	22
Dimmer Modes and Dimmer Curves	27
DMX Setup	28
DMX Traits	30
Remote Device Management (RDM)	39
Primary-Secondary Setup I Multi-Unit Power-Linking	40
Maintenance Guidelines I Fuse Replacement	41
Error Codes	42
Specifications	43
Dimensional Drawings	44
Optional Accessories I FCC Statement	45
Index	46

INFORMATION

INTRODUCTION

Please read and understand the instructions in this manual carefully and thoroughly before attempting to operate this device. These instructions contain important safety and use information.

This product is intended for use by professionally trained personnel only, and is not suitable for private use.

Unpacking

Every device has been thoroughly tested and has been shipped in perfect operating condition. Carefully check the shipping carton for damage that may have occurred during shipping. If the carton is damaged, carefully inspect the device for damage, and be sure all accessories necessary to install and operate the device have arrived intact. In the event damage has been found or parts are missing, please contact our customer support team for further instructions. Please do not return this device to your dealer without first contacting customer support. Please do not discard the shipping carton in the trash. Please recycle whenever possible.

Parts: To purchase parts online visit:
http://parts.adj.com (US)
http://www.adjparts.eu (EU)

ADJ SERVICE USA - Monday - Friday 8:00am to 4:30pm PST
Voice: 800-322-6337 I support@adj.com

ADJ SERVICE EUROPE - Monday - Friday 08:30 to 17:00 CET
Voice: +31 45 546 85 60 I support@adj.eu

ADJ PRODUCTS LLC USA
6122 S. Eastern Ave. Los Angeles, CA. 90040
323-582-2650 I www.adj.com I info@adj.com

ADJ SUPPLY Europe B.V
Junostraat 2 6468 EW Kerkrade, The Netherlands
+31 (0)45 546 85 00 I www.adj.eu I info@adj.eu

ADJ PRODUCTS GROUP Mexico
AV Santa Ana 30 Parque Industrial Lerma, Lerma, Mexico 52000
+52 (728) 282-7070

LIMITED WARRANTY & PRODUCT REGISTRATION

For up-to-date warranty information regarding your device, please visit ADJ's warranty information and registration pages online or scan the QR codes below.

It is strongly recommended to power the fixture down completely when not in use. Doing so will reduce wear on the fixture due to sustained or extended operational periods, thereby maximizing its operational lifespan.

INFORMATION

PRODUCT REGISTRATION

For up-to-date warranty information regarding your device, please visit ADJ's warranty information page online or scan the QR codes below.

USA: https://www.adj.com/pages/warranty-information

EU: https://www.adj.eu/terms_and_conditions

PRODUCT REGISTRATION

To register your product, please visit the page below or scan the QR code.

USA: https://www.adj.com/pages/product-warranty-registration

FEATURES

The ADJ Protégé XM is a compact, high-output CMY LED moving-head spot designed for professional touring, theater, and installation use. A 450 W LED engine produces a 7000K white point with high CRI, CMY color mixing, and two independent color wheels. Color Wheel 1: Red, Blue, Green, Orange, Quad Color 1, Lime, Amber, High CRI, Congo Blue. Color Wheel 2: Dark Red, Midnight Blue, Light Turquoise, Pink, UV, Quad Color 2, Lavender, CTO 2700K, CTC. Two rotating gobo wheels (7 interchangeable glass gobos + open each), an animation wheel, dual rotating prisms (6-facet circular and 6-facet linear), and variable frost (medium frost, heavy frost) provide a wide range of mid-air and projection effects. Motorized zoom (6°–48°) and focus support both tight beams and wide stage washes. Control options include 29 / 35 / 43-channel DMX modes, RDM, Art-Net, sACN, and built-in Aria X2 wireless DMX. A full-color LCD, USB service port, and locking power In/Out complete the package.

KEY FEATURES

- 450 W white LED engine, 7000K
- CRI: 73 (open), 86 (High CRI filter)
- CMY color mixing + 2 color wheels
- 2 rotating gobo wheels, 7 glass gobos each
- Animation wheel
- Dual rotating prisms: 6-facet circular + 6-facet linear
- Variable frost: medium + heavy
- Motorized zoom 6°–48° and focus
- DMX modes: 29 / 35 / 43 channels
- RDM, Art-Net, sACN
- Aria X2 wireless DMX
- Full-color LCD display
- USB service port
- Locking power In/Out
- Weight: 53.13 lbs. (24.1 kg)

INCLUDED ITEMS

- Omega brackets (×2)
- Power cable (×1)
- Safety cable (×1)

SAFETY GUIDELINES

To guarantee a smooth operation, it is important to follow all instructions and guidelines in this manual. ADJ Products, LLC is not responsible for injury and/or damages resulting from the misuse of this device due to the disregard of the information printed in this manual. Only qualified and/or certified personnel should perform installation of this device and only the original rigging parts included with this device should be used for installation. Any modifications to the device and/or the included mounting hardware will void the original manufacturer's warranty and increase the risk of damage and/or personal injury.

This product is intended for use by professionally trained personnel only, and is not suitable for private use.

PROTECTION CLASS 1 - FIXTURE MUST BE PROPERLY GROUNDED

THERE ARE NO USER SERVICEABLE PARTS INSIDE THIS UNIT. DO NOT ATTEMPT ANY REPAIRS YOURSELF, AS DOING SO WILL VOID YOUR MANUFACTURER'S WARRANTY. DAMAGES RESULTING FROM MODIFICATIONS TO THIS DEVICE AND/OR THE DISREGARD OF SAFETY INSTRUCTIONS AND GUIDELINES IN THIS MANUAL VOID THE MANUFACTURER'S WARRANTY AND ARE NOT SUBJECT TO ANY WARRANTY CLAIMS AND/OR REPAIRS.

DO NOT PLUG FIXTURE INTO A DIMMER PACK!
NEVER OPEN THIS FIXTURE WHILE IN USE!
UNPLUG POWER BEFORE SERVICING FIXTURE!
NEVER TOUCH FIXTURE DURING OPERATION, AS IT MAY BE HOT!
KEEP FLAMMABLE MATERIALS AWAY FROM FIXTURE!

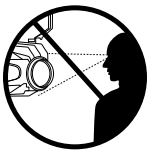

NEVER LOOK DIRECTLY INTO THE LIGHT SOURCE!
RETINA INJURY RISK — MAY INDUCE BLINDNESS!
SENSITIVE PERSONS MAY SUFFER AN EPILEPTIC SHOCK!

INDOOR / DRY LOCATIONS USE ONLY!
DO NOT EXPOSE FIXTURE TO RAIN AND/OR MOISTURE!

MINIMUM SAFETY DISTANCE IS 1.6 FEET (0.5 METER)
MINIMUM DISTANCE TO LIGHTED OBJECTS IS 1.6 FEET (0.5 METER)
MINIMUM DISTANCE OF FLAMMABLE MATERIALS FROM THE SURFACE IS 8 INCHES (0.2 METERS)
AMBIENT OPERATING TEMPERATURE IS 14°F TO 113°F (–10°C TO 45°C)

SAFETY GUIDELINES

- **Ambient operating temperature range is 14°F to 113°F (-10°C to 45°C)!**
- **DO NOT** expose to rain or moisture, or spill liquids into or onto the device! Any damage resulting from these conditions may void the manufacturer's warranty.
- **DO NOT TOUCH** the fixture housing during operation. Disconnect the power and allow approximately 15 minutes for the fixture to cool down before servicing.
- **DO NOT** shake the fixture, and avoid brute force when installing and/or operating the fixture.
- **DO NOT** operate the fixture if the power cord has become frayed, crimped and/or damaged. If the power cord is damaged, replace immediately with a new one of the same power rating.
- **DO NOT** attempt to remove or break off the ground prong from the electrical cord. This prong is used to reduce the risk of electrical shock and fire in case of an internal short.
- **DO NOT** attempt to operate this unit if it has been damaged in any way.
- Disconnect from main power before making any type of connection.
- **DO NOT** block any air ventilation slots. All fan and air inlets must remain clean and never blocked. Allow approx. 1.5 feet (0.5m) between fixture and other devices or a wall for proper cooling.
- Always be sure to mount this unit in an area that will allow proper ventilation. Allow about 1.5 feet (0.5m) between this device and a wall.
- **DO NOT** remove the cover for any reason.
- When installing fixture in a suspended environment, always use mounting hardware that is no less than M10 x 25mm, and always install fixture with an appropriately rated safety cable.
- Never plug this unit in to a dimmer pack.
- During long periods of non-use, disconnect the unit's main power.
- Always mount this unit in a safe and stable manner.
- Power-supply cords should be routed so that they are not likely to be walked on or pinched by items placed upon or against them, paying particular attention to the point where they exit from the unit.
- Cleaning - The fixture should be cleaned only as recommended by the manufacturer.
- Heat - The appliance should be situated away from heat sources such as radiators, heat registers, stoves, or other appliances (including amplifiers) that produce heat.
- The fixture should be serviced by qualified service personnel when:
  A. The power-supply cord or the plug have been damaged.
  B. Objects have fallen onto, or liquids have been spilled into, the fixture.
  C. The fixture does not appear to operate normally or exhibits a marked change in performance.
  D. The fixture has fallen and/or has been subjected to extreme handling.

OVERVIEW

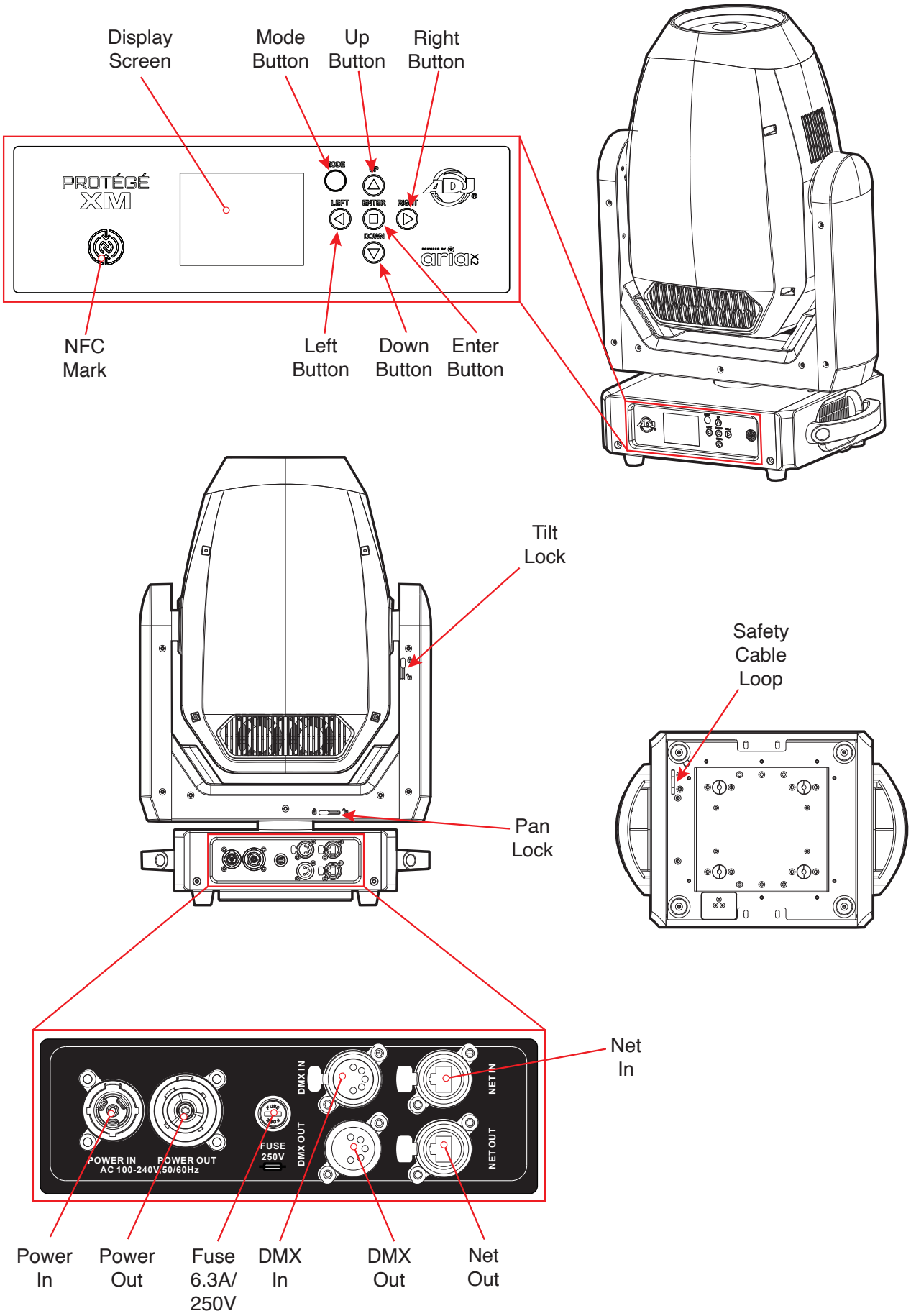
Display Screen
Mode Button
Up Button
Right Button
PROTÉGÉ XM
MODE
UP
LEFT
ENTER
RIGHT
DOWN
aria
NFC Mark
Left Button
Down Button
Enter Button
Tilt Lock
Safety Cable Loop
Pan Lock
Net In
POWER IN
AC 100-240V 50/60Hz
POWER OUT
FUSE 250V
DMX IN
DMX OUT
NET IN
NET OUT
Power In
Power Out
Fuse 6.3A/ 250V
DMX In
DMX Out
Net Out

GOBOS, COLORS, AND EFFECTS

COLOR WHEEL 1

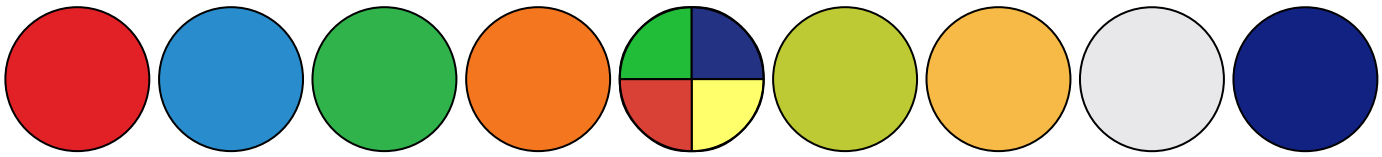

POS 1 Red | POS 2 Blue | POS 3 Green | POS 4 Orange | POS 5 Quad Color 1 | POS 6 Lime | POS 7 Amber | POS 8 High CRI | POS 9 Congo Blue

COLOR WHEEL 2

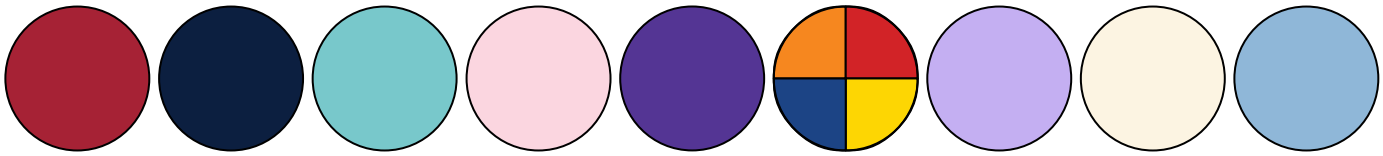

POS 1 Dark Red | POS 2 Midnight Blue | POS 3 Light Turquoise | POS 4 Pink | POS 5 UV | POS 6 Quad Color 2 | POS 7 Lavender | POS 8 CTO 2700K | POS 9 CTC

ROTATING GOBO WHEEL 1

POS 1 | POS 2 | POS 3 | POS 4 | POS 5 | POS 6 | POS 7

ROTATING GOBO WHEEL 2

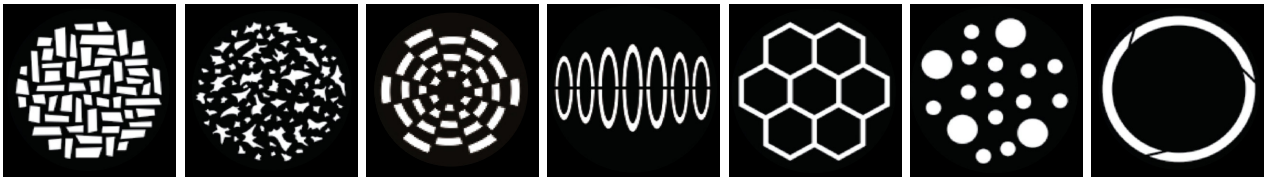

POS 1 | POS 2 | POS 3 | POS 4 | POS 5 | POS 6 | POS 7

ANIMATION WHEEL

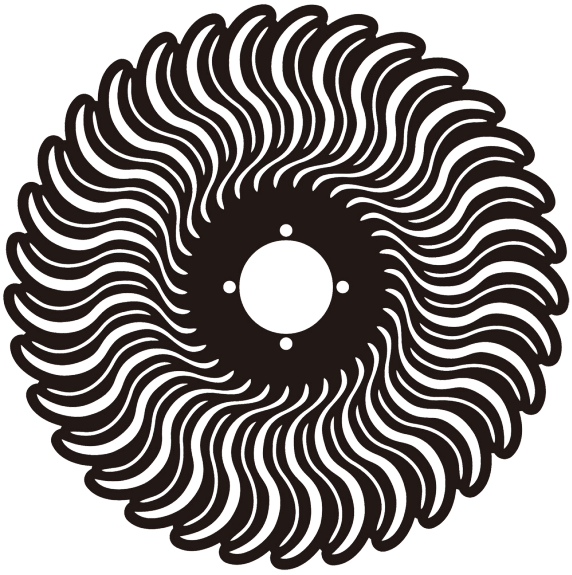

PRISMS

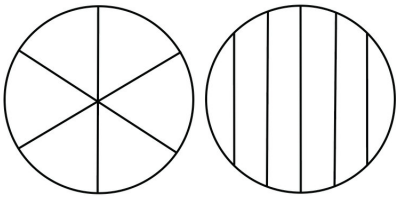

POS 1 6 FACET ROUND | POS 2 6 FACET LINEAR

GOBO REPLACEMENT

1. Remove the 8 screws from the head covers (4 on each side) and remove both head covers. On the back side of the head, locate and disconnect the electrical connector near the upper right hand side of the head, near the top of the arm, as shown in the right image below.

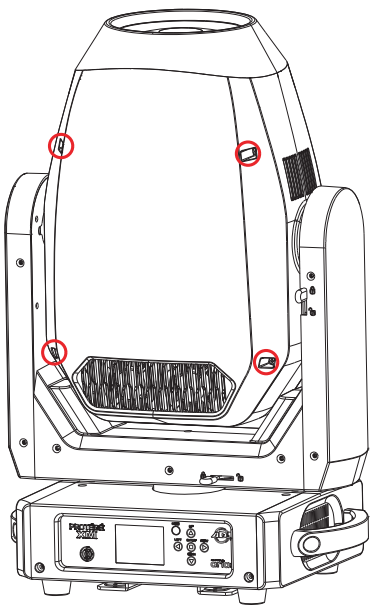

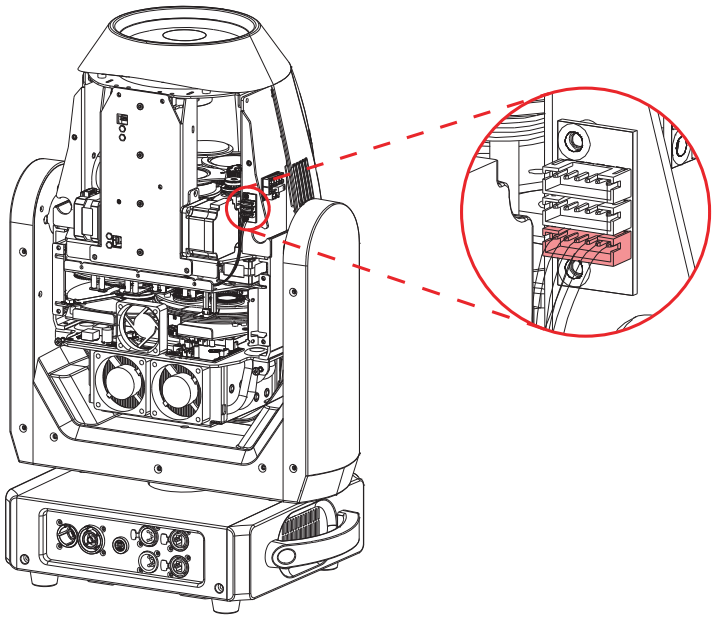

2. Turn the fixture around to view the front side of the head. Locate the 2 thumbscrews near the middle of the head, as in the left image shown below. Loosen these thumbscrews, and remove the gobo module from the head of the fixture.

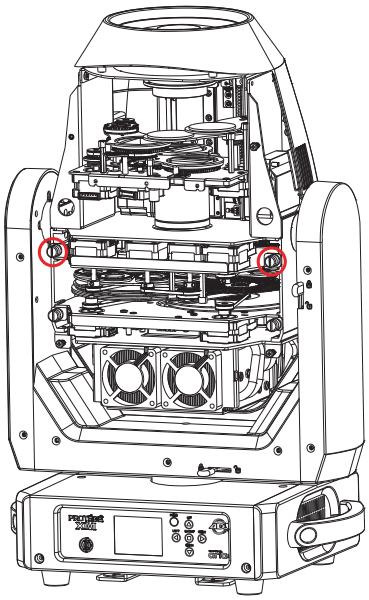

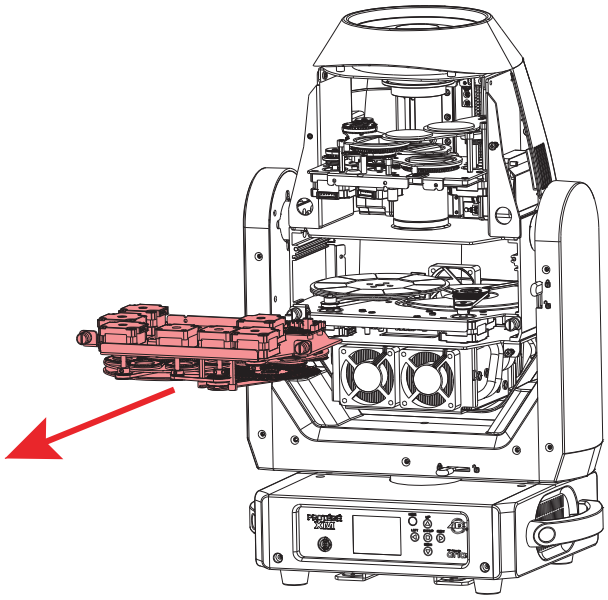

GOBO REPLACEMENT

3. Firmly grasp the gobo holder containing the gobo that you wish to replace. Lift the gobo holder clear of its socket in the gobo wheel, then pull the gobo holder outward. The gobo holder should come free of the gobo wheel.

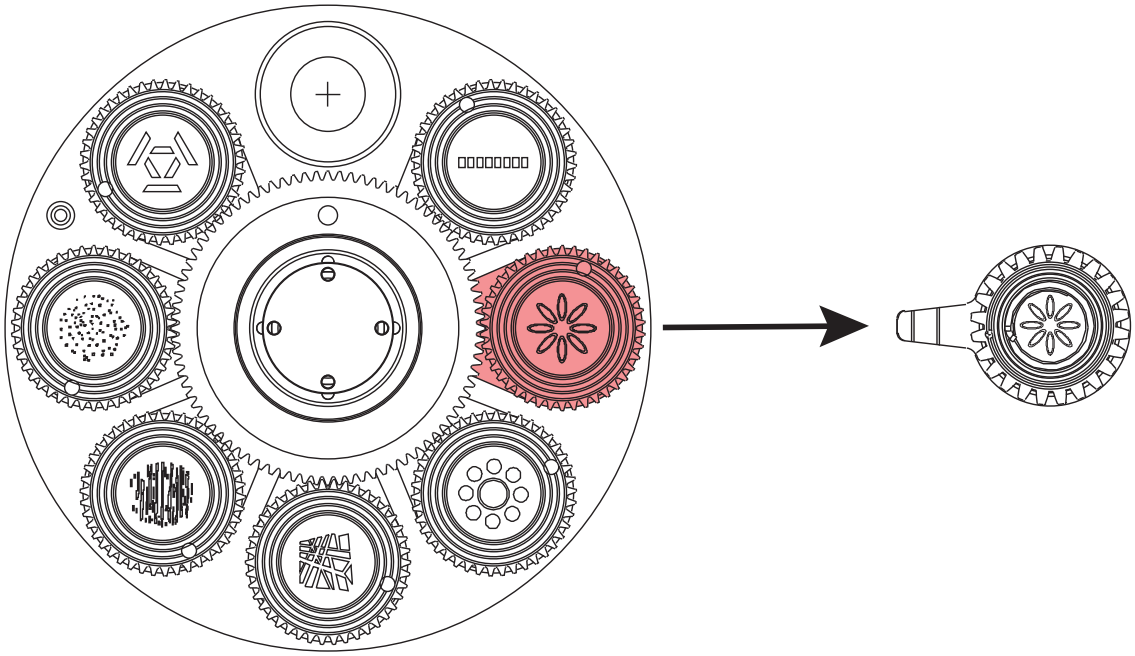

4. Place the gobo holder on a flat, stable surface with the geared wheel facing downwards. Use a pick to press the tab that releases the gobo spring, then remove both the spring and the gobo from the holder. **Use caution to avoid scratching the gobo during this process.**

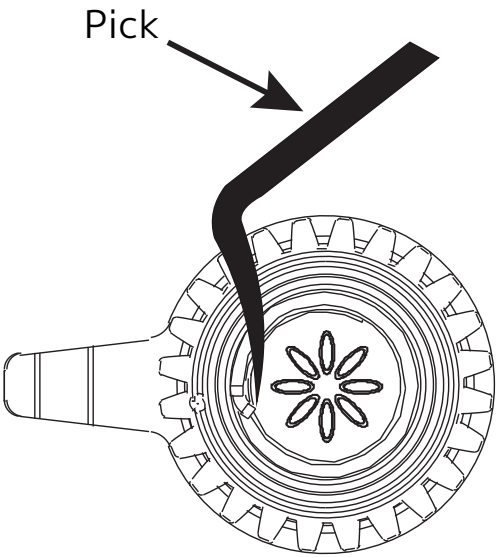

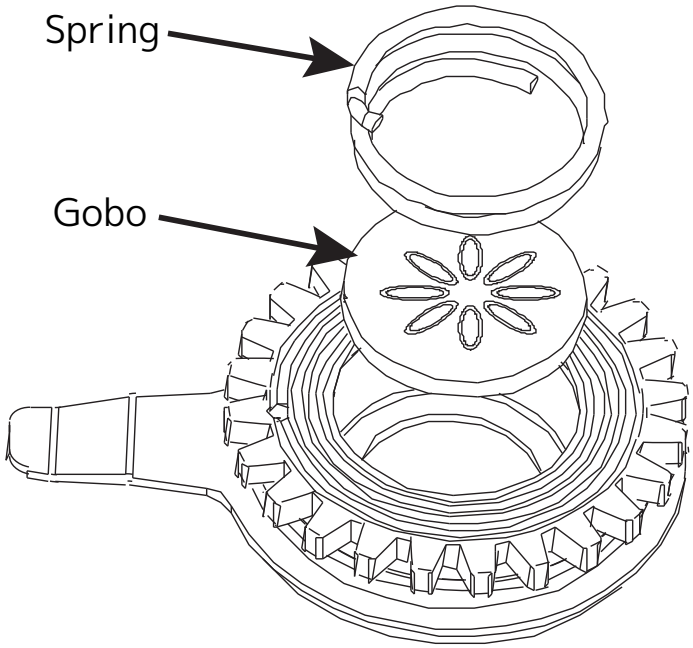

GOBO REPLACEMENT

5. Place the new gobo in the gobo holder, making sure that the indexing tab on the gobo is aligned with the notch in the gobo holder. Secure in place with the gobo spring, then reassemble the unit by reversing steps 1-4. When re-inserting the gobo holder in the gobo wheel, make sure that the indexing notches on the gobo holder and gobo wheels are aligned.

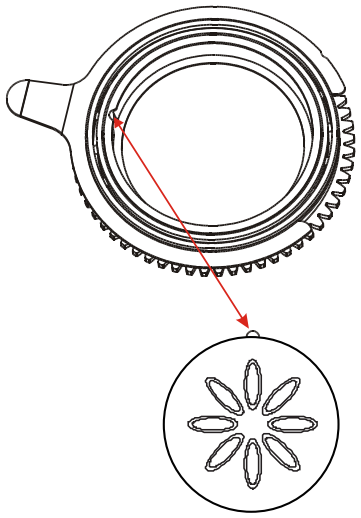

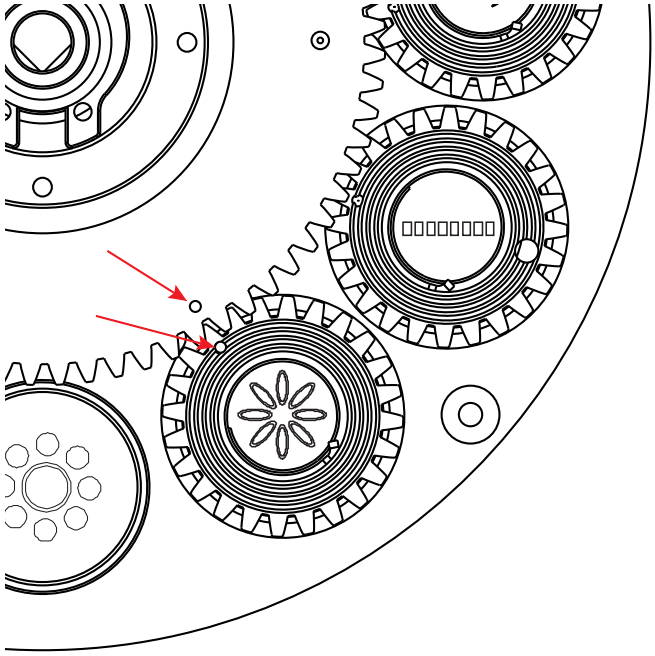

INSTALLATION GUIDELINES

DO NOT INSTALL THE FIXTURE IF YOU ARE NOT QUALIFIED TO DO SO!

Fixture MUST be installed following all local, national, and country commercial electrical and construction codes and regulations.

When installing the unit, the trussing or area of installation must be able to hold 10 times the weight of the unit and any attached accessories without any deformation. The unit must be secured with a secondary safety attachment, e.g. an appropriately-rated safety cable.

Before rigging/mounting a single fixture to any metal truss/structure or placing the fixture(s) on any surface, a professional equipment installer MUST be consulted to determine if the metal truss/structure or surface is properly certified to safely hold the combined weight of the fixture(s), clamps, cables, and accessories.

Ambient operating temperature range is 14°F to 113°F (-10°C to 45°C). Do not operate this device when ambient temperature falls ouside this range.

Fixture(s) should be installed away from walking paths, seating areas, or areas where unauthorized personnel might reach the fixture by hand.

NEVER stand directly below the fixture(s) when rigging, removing, or servicing.

Overhead fixture installation must always be secured with a secondary safety attachment, such as an appropriately rated safety cable that can hold 10 times the weight of the fixture.

Overhead mounting requires extensive experience, including calculating working load limits, knowledge of installation material being used, and periodic safety inspection of all installation material as well as the unit itself. If you lack these qualifications, do not attempt the installation yourself.

The installation should be checked by a skilled person once a year.

OPERATIONAL BREAKS
Duty Cycle - It is strongly recommended to power the fixture down completely when not in use. Doing so will reduce wear on the fixture due to sustained or extended operational periods, thereby maximizing the fixture's operational lifespan.

INSTALLATION GUIDELINES

CLAMP MOUNTING

This fixture features mounting holes on the top of the mounting yoke or on the rear of the fixture near the display screen for the attachment of an Omega bracket (the image below shows the Omega bracket mounted onto the rear of the unit). When mounting the fixture to a truss or any other suspended structure, insert a bolt of appropriate size through the bottom of the mounting clamp and the central hole on the Omega bracket, and secure them together with a matching nut and washer. Then insert the twist lock fasteners of the Omega bracket into the mounting holes on the fixture, and twist to secure in place. Additionally, a safety cable of the appropriate weight rating should be secured to the provided safety cable loop on the rear of the fixture, near the power/data ports.

ALWAYS ATTACH A SAFETY CABLE WHENEVER INSTALLING THIS FIXTURE IN A SUSPENDED ENVIRONMENT TO ENSURE THAT THE FIXTURE WILL NOT FALL IF THE CLAMP FAILS.

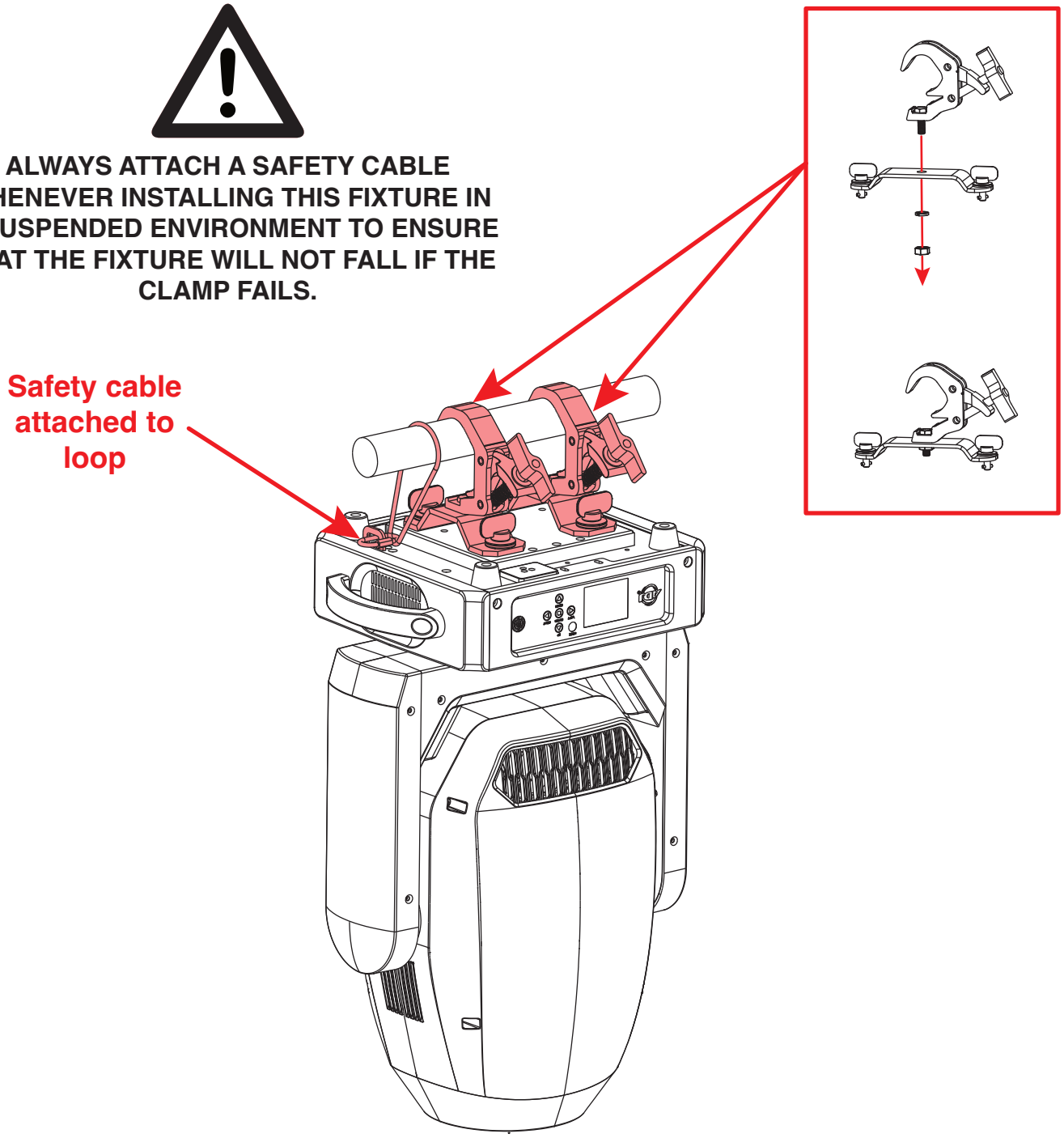

INSTALLATION GUIDELINES

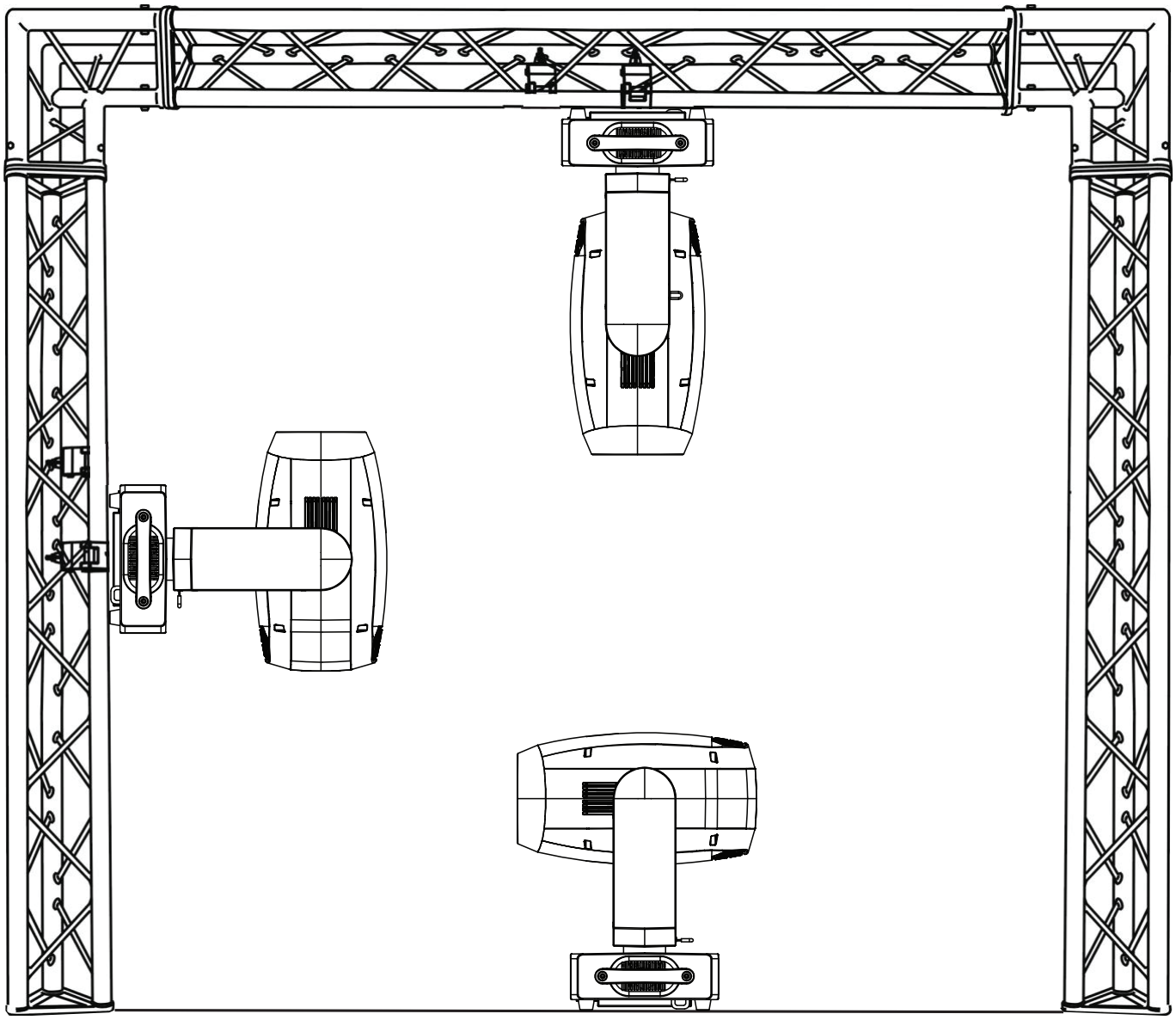

The unit is fully operational in three mounting positions: hanging upside-down from a ceiling or truss, mounted sideways on a truss, or set on a flat level surface. Keep flammable materials at least 8 in (0.2 m) from the fixture surface. Always install a safety cable as a secondary attachment when the fixture is suspended. Never use the carrying handles for secondary attachment.

FALLING FIXTURES CAN CAUSE SEVERE INJURY OR SERIOUS EQUIPMENT DAMAGE! FOR THIS REASON, FIXTURES SHOULD BE INSTALLED AND INSPECTED ONLY BY QUALIFIED PERSONNEL. DO NOT INSTALL THE UNIT IF YOU LACK THE QUALIFICATIONS TO DO SO, OR IF YOU HAVE DOUBTS ABOUT THE SAFETY AND SECURITY OF THE INSTALLATION SETUP OR LOCATION!

ALWAYS ATTACH A SAFETY CABLE WHENEVER INSTALLING THIS FIXTURE IN A SUSPENDED ENVIRONMENT TO ENSURE THE FIXTURE WILL NOT FALL IF THE CLAMP FAILS.

INSTALLATION GUIDELINES

POTENTIAL INTERNAL FIXTURE DAMAGE FROM EXTERNAL SOURCES OF LIGHT BEAMS

External sources of light beams from direct sunlight, lighting moving head fixtures, and lasers, which are focused directly towards the exterior housing and/or penetrate the front lens opening of ADJ lighting fixtures, can cause severe internal damage including burning to optics, dichroic color filters, glass and metal gobos, prisms, animation wheels, frost filters, iris, shutters, motors, belts, wiring, discharge lamps, and LEDs.

This issue is not specific only to ADJ lighting fixtures, it is a common issue with lighting fixtures from all manufacturers. Although there is no true way to fully prevent this issue from happening, the guidelines below can prevent any potential damage from occurring if followed. Contact ADJ Service for more details.

DO NOT EXPOSE THE FIXTURE AND/OR FRONT LENS OPENING TO LIGHT BEAMS FROM DIRECT SUNLIGHT, OTHER LIGHTING MOVING HEAD FIXTURES, AND LASERS WHILE UNPACKING, INSTALLATION, USE, AND EXTENDED IDLE TIMES OUTDOORS. DO NOT FOCUS A LIGHT BEAM FROM ONE LIGHTING FIXTURE DIRECTLY TOWARDS ANOTHER.

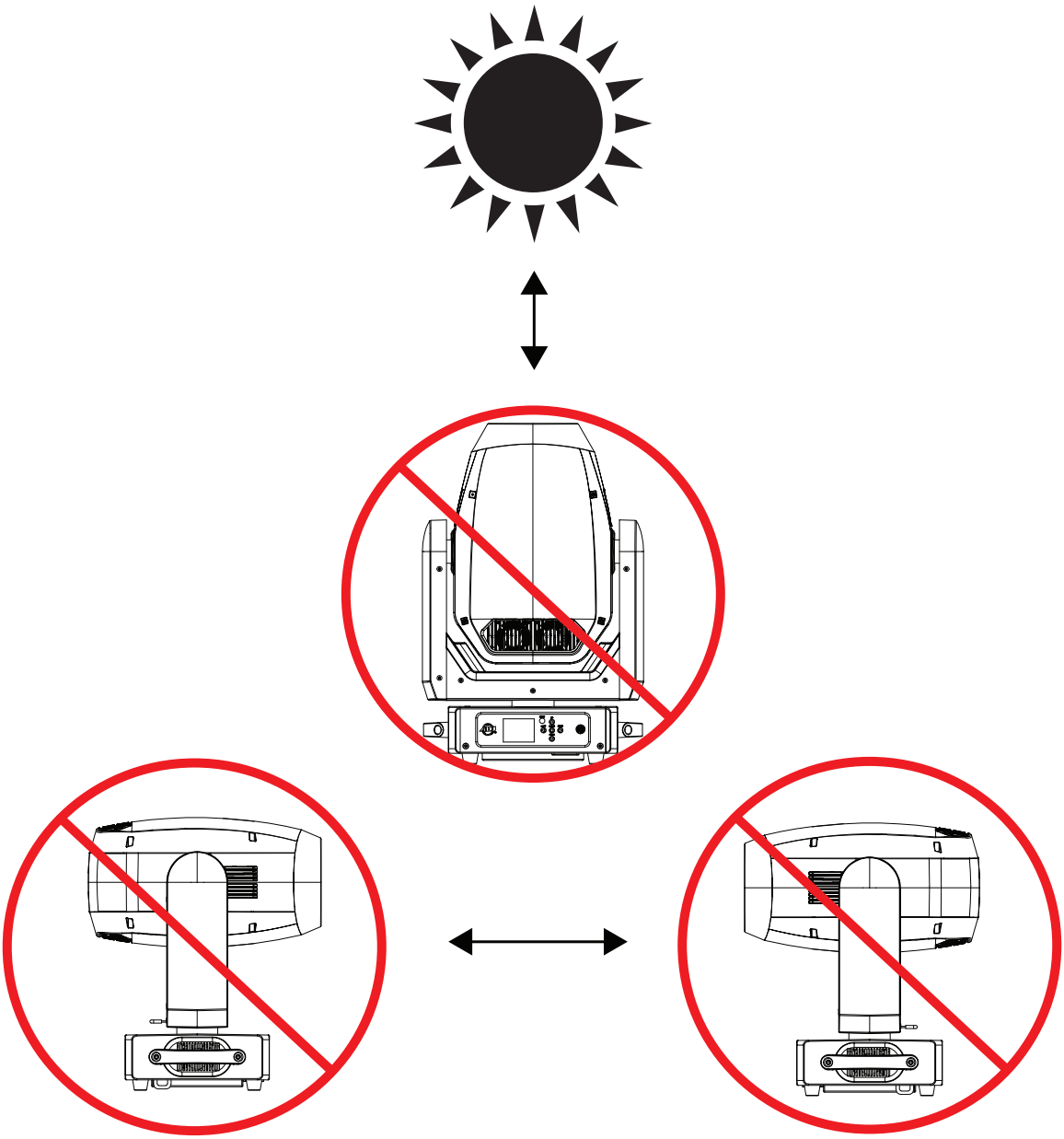

ARIA SETUP AND GUIDELINES

2.4 GHz VERSUS SUB-GHz FREQUENCIES:

Sub-GHz frequencies provide superior reliability and range compared to higher frequencies, making them well suited for consistent communication across long distances or in difficult conditions. Devices operating in the sub-GHz range (frequencies below 1 GHz) can transmit over significant distances and penetrate physical barriers such as walls and buildings more effectively. These frequencies also experience less interference than the congested 2.4 GHz band commonly used by wireless devices.

In the United States, the 900 MHz band is a versatile frequency range used by various services, with the FCC overseeing its allocation and regulation.

In the European Union, the 868 MHz frequency is designated by ETSI as the Sub-GHz frequency.

In summary, if an application demands high data rates and more bandwidth in urban or densely populated areas where interference management is feasible, 2.4 GHz is a suitable choice. For applications requiring long-range communication and better obstacle penetration, particularly in rural or industrial settings with fewer regulatory constraints, a sub-GHz frequency (below 1 GHz) is the better option.

INSTALLATION RECOMMENDATIONS:

With the many factors that affect and/or interrupt a wireless signal, such as walls, glass, metal, objects, and people, it is highly recommended to:

- Install devices a minimum of 9.8 ft (3 m) above audiences and/or ground level where practical.
- Adjust the wireless antenna to a vertical upright position.
- Position devices in direct line of sight of the controlling device.

Careful planning and testing of the selected installation location is critical to ensure optimum and reliable wireless operation.

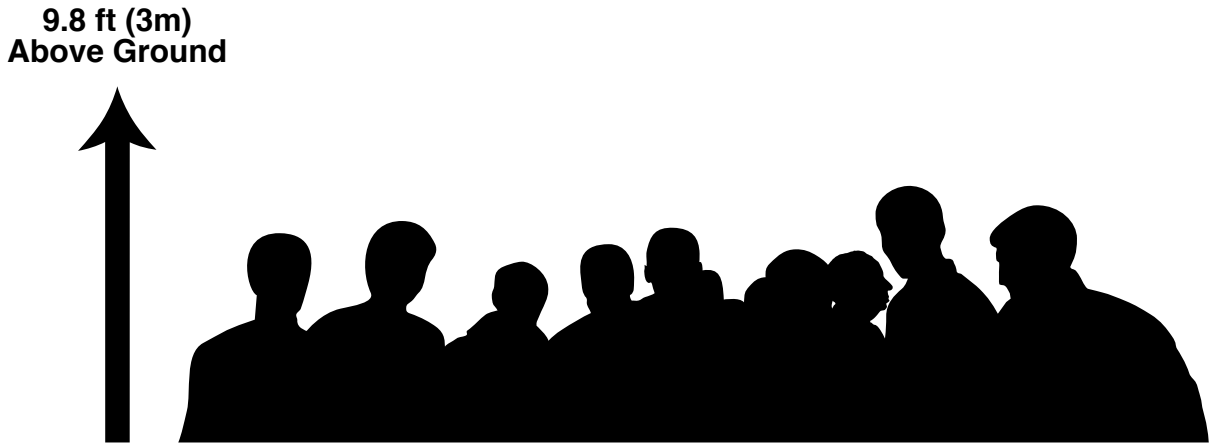

ARIA SETUP AND GUIDELINES

GENERAL INFORMATION

The Aria Bluetooth app has the ability to connect wirelessly to any device that has Aria wireless DMX installed and has Bluetooth enabled.

Before installing the fixture in a remote location, double check that the fixture's main power is switched on, and that the Bluetooth function has been enabled in the fixture's system menu. Certain fixtures may have Bluetooth disabled by default. If this function is disabled, then the fixture cannot be configured remotely using the Aria app, and will have to be configured directly from the fixture's control screen.

Additionally, the user should consider setting the fixture's No DMX setting to "Hold Last". This will allow the fixture to continue running using the current settings, even if the Aria app device moves out of range, the app is closed, or the signal is otherwise interrupted, minimizing disruption in the operation of the fixtures.

LEGACY DEVICES

Please note that legacy connected devices, such as those using Wifly, E-Fly, or Magfly, are not compatible with this app. For such legacy devices, the use of a bridge is recommended, as the bridge can communicate with these devices via its SM220 protocol.

The Aria X2 BLE app is currently available from the Apple app store.

FIXTURE IDENTIFICATION

Aria compatible devices can be identified and connected via the **Fixtures** tab in the app. This tab displays a field of twenty-four buttons that can be assigned to Aria compatible devices that are within range, and the buttons will automatically be assigned to devices in the order in which they are discovered. If more than twenty-four units are within range, it may be necessary to use the filter feature to search for the desired fixture. Button location can be edited by selecting the configuration key, then the user can drag and drop the buttons to the desired location and hit save to keep changes. Once a device is known to the app, it can also be assigned to a particular button. From that point forward, the assigned device will always be assigned to that button location.

IMPORTANT NOTE: For version 0.65 or higher, a shared system password is required to connect to any device.

Unlike wireless DMX, Bluetooth is a connect first protocol. To connect to a device or fixture, tap the assigned button in the **Fixtures** tab. If the connection is successful, a green frame will appear around the button, indicating that the app was able to retrieve the current channel values from the fixture. The app must be connected to a fixture in order to use its channel controls or view and change settings. Please note that not all Aria devices have channel controls.

Additionally, each fixture can only be connected to one device with the app at any given time. Once a fixture is connected to the app installed on one device, any other devices will be blocked from connecting. As a result, when setting up a new fixture for the first time, best practice is to have only a single user with the app open within range, in order to ensure that the fixture pairs to the intended user's device.

ARIA SETUP AND GUIDELINES

DETECTED DEVICES

The second table section shows all Aria devices detected in range. A checkmark indicates the device is currently assigned to a button. If more than 24 devices are within range, the user may remove or add devices to the buttons list by tapping a row to check or uncheck a device. If all buttons are full, it will be necessary to uncheck a device before adding another.

Filter: The user can filter which Aria devices get button assignments by tapping “filter” at the top of the view. A popup will appear where the user can enter text to filter devices by username, model name, or manufacturer. **Please note that these searches are case sensitive.**

Note: If a device shows an asterisk (*) it means that there is no fixture profile currently available, and therefore there will be limited support available for that device. The user will still be able to connect and adjust channels if the device supports that feature, but the user will not be able to view how many channels the device has or the channel names.

SECURITY

Each fixture must have a password saved to be secure. When a new fixture is installed for the first time, its password will automatically be set to the app’s system password on first connection. Once the password has been entered, the user will need to exit out to the main page containing the fixture buttons, then de-select and re-select the fixture to lock in the password. From that point forward only, controlling devices that use the correct password can connect to this fixture. **This security is now required by law in most jurisdictions.**

The app will detect any Aria capable fixture within range, even if the app does not have the password to that fixture and therefore cannot access that fixture. If that fixture is selected in the app, the green frame will momentarily appear around that fixture’s button, but then disappear. This indicates that the fixture is visible but inaccessible.

NEAR FIELD COMMUNICATION (NFC)

Near Field Communication (NFC) is a short-range wireless technology, operating at 13.56 MHz, that enables secure data exchange between devices within a proximity of 6-inches. With NFC, one can use an Android or iOS device to configure an NFC compatible fixture. NFC has three modes of operation: Reader/Writer Mode, which allows an NFC device to read or write data to an NFC tag; Peer-to-Peer Mode, enabling data exchange between two NFC devices; and Card Emulation Mode, which lets an NFC device emulate a contactless smart card. The technology is built on RFID standards, including ISO/IEC 14443 and ISO/IEC 18092, ensuring compatibility between NFC devices. Despite its lower data transfer rates compared to Wi-Fi or Bluetooth, ranging from 106 kbps to 424 kbps, NFC incorporates encryption and authentication protocols. NFC tags on lighting fixtures simplify setup and adjustments, and aid in tracking and maintenance when integrated into lighting equipment.

NFC Setup and Usage

- Enable NFC: Activate NFC on both the control device and the fixture.
- Physical Proximity: Bring the control device near the designated NFC area of the fixture indicated by the NFC directional mark shown here.

- Initiate Connection: The NFC-enabled device should automatically detect the fixture, prompting a connection notification.
- Confirmation: Accept the connection request to establish a link between the control device and the fixture.
- Configuration Options: Adjust lighting settings, presets, and modes via the control device, depending on fixture capabilities.
- Data Exchange: Use NFC to transfer presets, scenes, and firmware updates between devices, simplifying data sharing.

Tips for Successful NFC Interaction

- Proximity: Maintain a short-range distance, within 6-inches, between the control device and the indicated NFC area of the fixture.
- Device Compatibility: Ensure your device supports NFC, and has the necessary apps for interaction.
- Interference: Avoid obstacles between the devices, like metal objects, to ensure smooth communication.
- Security: Disable NFC when not in use for added security against unauthorized access.

SYSTEM MENU

This unit features a display screen with a 6-button control pad, which can be used to easily adjust any device settings.

Pressing the **MODE** button will cycle through the various Main Menu options. When the desired Main Menu option is displayed on the screen, press the **ENTER** button to enter the sub-menu, then use the **UP**, **DOWN**, **LEFT**, and **RIGHT** buttons to scroll through sub-menu options. In some cases, there will be a second sub-menu that can be navigated in the same way. Press **MODE** at any time to exit without making changes.

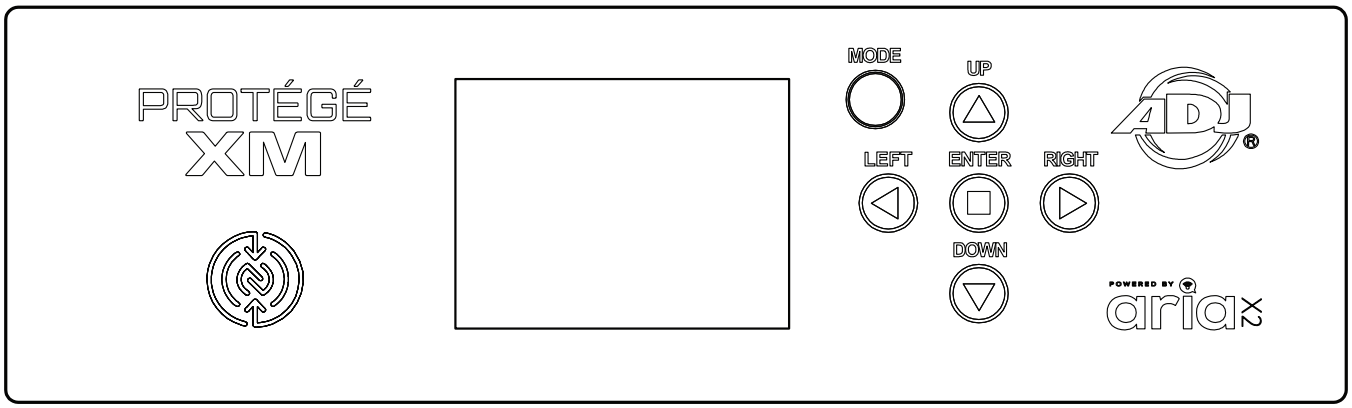

SCREEN LOCK

The control panel screen can be set to lock after a period of inactivity. This feature is turned off by default, but can be changed by navigating to Personality > Display > Key Lock in the system menu, where three options are available:

- **OFF**: Control keys are always unlocked.
- **ON**: Control keys lock after a pre-set period of inactivity (Screen Saver Delay). To unlock, press and hold the **MODE** button for 3 seconds.
- **ON1**: Control keys lock after a pre-set period of inactivity (Screen Saver Delay). To unlock, press **UP**, **DOWN**, **UP**, **DOWN**, **ENTER**.

SOFTWARE UPDATE

For software updates, please contact ADJ customer support.

ADJ SERVICE USA - Monday - Friday 8:00am to 4:30pm PST
323-582-2650 I support@adj.com

ADJ SERVICE EUROPE - Monday - Friday 08:30 to 17:00 CET
+31 45 546 85 60 I support@adj.eu

SYSTEM MENU

MAIN MENU	OPTIONS / VALUES (Default Settings in **BOLD**)		
DMX Settings	DMX Address	**001** - XXX	
	DMX Channel Mode	Basic 29, **Standard 35**, Extended 43, User Mode	
	No DMX Status	**Hold Last**, Blackout, Manual, Internal Programs	
Personality	Prim/Sec Mode	Primary / **Secondary**	
	Select Signal	**DMX** or Aria	
		Aria and DMX Out	
		DMX and Aria Out	
	Aria	Aria	On / **Off**
		Frequency	**2.4 GHz**
			Sub-GHz US
			Sub-GHz EU
		2.4 GHz CH	**00** - 15
		Sub-GHz CH	**00** - 09
		Mesh	On / **Off**
		Bluetooth	**On** / Off
	Network	Protocol	**ArtNet** / sACN / Disable
		IP Mode	2.x.x.x
			10.x.x.x
			Custom IP
			DHCP
		IP Address	2.1.1.1
		Subnet Mask	255.0.0.0
		ArtNet U	0 - 32767
		sACN Settings	sACN U: **00001** - 63999
			sACN Priority: **0** - 255
		Lock Net	On / **Off**
	Status Settings	Pan Degree	630 / **540**
		Pan Invert	On / **Off**
		Tilt Invert	On / **Off**
		RDM	**On** / Off
		P/T Feedback	**On** / Off
		P/T Speed	**Standard** / Fast
		Temperature Unit	°C / **°F**
		Hibernation	Off, 1min - 99min, default = **15min**
	Fan Settings	Head Fan	**Auto**, High, Low, Mute
		Base Fan	**Auto**, High, Low, Mute
	Dim Modes	**Standard**, Stage, TV, Architectural, Theatre, Stage 2	
		Dim Speed	0.1s - 10s
	LED Refresh Rate	900-1500Hz (**1200Hz**), 2500Hz, 4000Hz, 5000Hz, 6000Hz, 10KHz, 15KHz, 20KHz, 25KHz	
	Dim Curve	Linear, **Square**, Inv. Squa, S. Curve	
	CT Mode	On / **Off**	

SYSTEM MENU

MAIN MENU	OPTIONS / VALUES (Default Settings in **BOLD**)			
Personality	Reset Motors	Reset All Motors	Yes / **No**	
		Pan/Tilt Reset	Yes / **No**	
		CMY Module Reset	Yes / **No**	
		Effects Module Reset	Yes / **No**	
		Optical Module Reset	Yes / **No**	
	Display	Intensity	1 - **10**	
		Display Invert	**Auto** / Yes / No	
		Screen Saver Delay	Off - 10min, default = **5min**	
		Key Lock	**Off** / On / On1	
	Set User Mode	Pan	**1**	
		Pan Fine	**2**	
		Tilt	**3**	
		Tilt Fine	**4**	
		...	**...**	
		P/T Speed	**42**	
		Special Function	**43**	
	Service	Passcode = 050	Effect Adjust (Calibration)	Pan 000 - 255
				Tilt 000 - 255
				Cyan 000 - 255
				Magenta 000 - 255
				Yellow 000 - 255
				...
			Color 1 Adjust	Color wheel 1 - Color 1
				Color wheel 1 - Color 2
				...
				Color wheel 1 - Color 9
			Color 2 Adjust	Color wheel 2 - Color 1
				Color wheel 2 - Color 2
				...
				Color wheel 2 - Color 9
			Gobo 1 Focus Adjust	Gobo 1
				Gobo 2
				...
				Gobo 7
			Gobo 2 Focus Adjust	Gobo 1
				Gobo 2
				...
				Gobo 7
			Factory Restore	**No** / Yes

SYSTEM MENU

MAIN MENU	OPTIONS / VALUES (Default Settings in **BOLD**)		
Manual Control	Pan	000 - 255	
	Pan Fine	000 - 255	
	Tilt	000 - 255	
	Tilt Fine	000 - 255	
	Continuous Pan	000 - 255	
	Cyan	000 - 255	
	Magenta	000 - 255	
	Yellow	000 - 255	
	Color Wheel 1	000 - 255	
	Color Wheel 2	000 - 255	
	Color Macros	000 - 255	
	Gobo Wheel 1	000 - 255	
	Gobo 1 Rotation	000 - 255	
	Gobo 1 Index Fine	000 - 255	
	Gobo Wheel 2	000 - 255	
	Gobo 2 Rotation	000 - 255	
	Gobo 2 Index Fine	000 - 255	
	Shutter	000 - 255	
	Dimmer	000 - 255	
	Prism 1	000 - 255	
	Prism 1 Rotation	000 - 255	
	Prism 1 Index Fine	000 - 255	
	Prism 2	000 - 255	
	Prism 2 Rotation	000 - 255	
	Prism 2 Index Fine	000 - 255	
	Prisms Macros	000 - 255	
	Focus	000 - 255	
	Focus Fine	000 - 255	
	Zoom	000 - 255	
	Zoom Fine	000 - 255	
	Frost 1	000 - 255	
	Frost 2	000 - 255	
	Animation	000 - 255	
	Animation Rotation	000 - 255	
	CMY & Color Macro Speed	000 - 255	
Internal Programs	Program 1	Speed	000 - 255
		Fade	000 - 255
	Program 2	Speed	000 - 255
		Fade	000 - 255
	...	...	...
	Program 7	Speed	000 - 255
		Fade	000 - 255

SYSTEM MENU

MAIN MENU	OPTIONS / VALUES (Default Settings in **BOLD**)			
Information	Fixture Life Time	Power On Time	xxxxxx Hours	
		P-On Time-R	xxxxxx Hours	
		P-On Time-Reset	Passcode = 050	
	Total LED Time	LED On Time	xxxxxx Hours	
		LED On-Time-R	xxxxxx Hours	
		LED Hours Reset	Passcode = 050	
	Fixture Temps	LEDs	Current	xxx F / xxx C
			Max Resettable	xxx F / xxx C
		Base Temp	Current	xxx F / xxx C
			Max Resettable	xxx F / xxx C
		Reset LED Temp	Yes / **No**	Passcode = 050
		Reset Base Temp	Yes / **No**	Passcode = 050
	Fan Info (RPM)	LED Fan 1	2500 - 3400 RPM	
		LED Fan 2	2500 - 3400 RPM	
		LED Fan 3	2500 - 3400 RPM	
		LED Fan 4	2500 - 3400 RPM	
		Head Fan 1	2500 - 3400 RPM	
		Head Fan 2	2500 - 3400 RPM	
		Base Fan 1	2500 - 3400 RPM	
		Base Fan 2	3400 - 4500 RPM	
	DMX Values	Pan		
		Pan Fine		
		...		
	Error Logs	List Errors one by one		
		Reset Error Log	Yes / **No**	Passcode = 050
	Software Version	x.x.x		
	Product IDs	Mac Address	xx-xx-xx-xx-xx-xx	
		RDM UID	xxxxxx	
		Aria ID	xx:xx:xx:xx:xx:xx	

DIM MODES AND CURVES

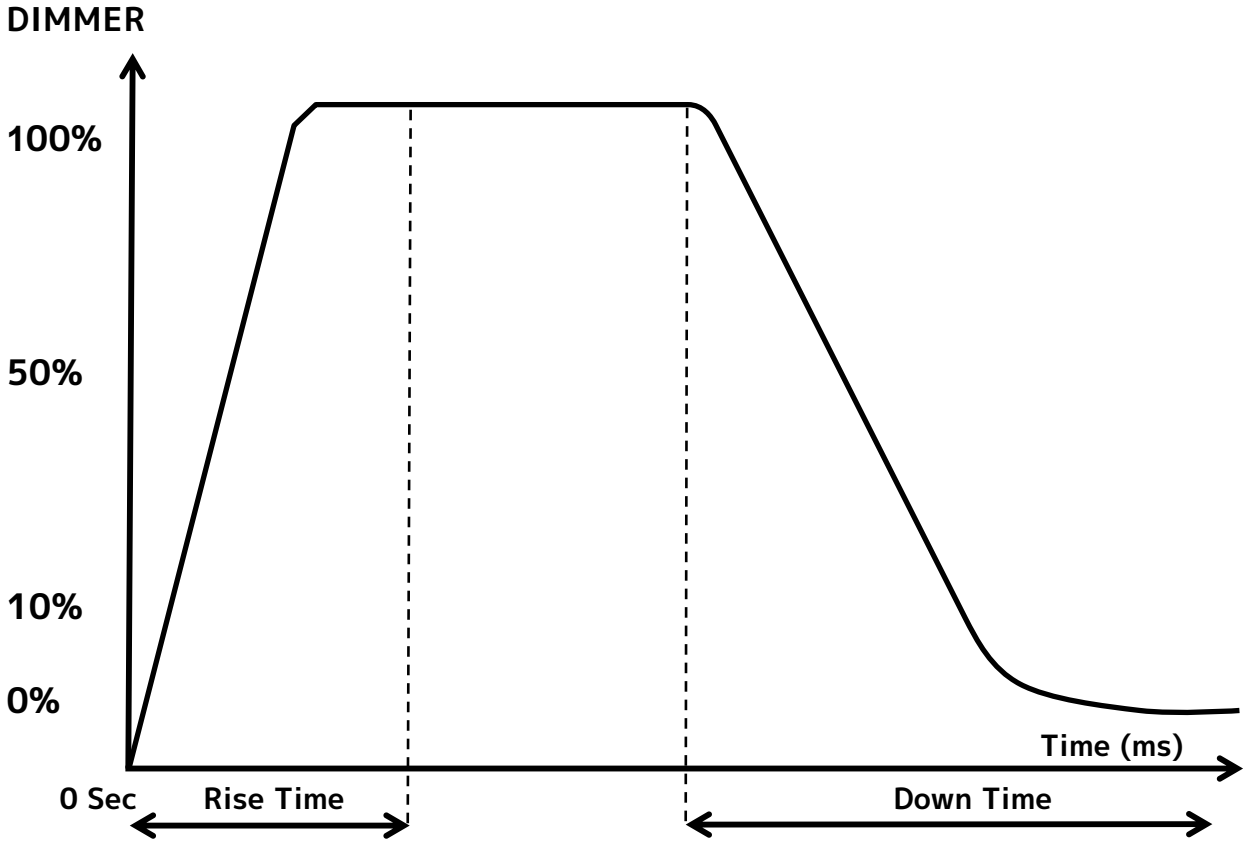

Dimming Curve Ramp Effect	0 sec Fade Time		1 sec Fade Time	
	Rise Time (ms)	Down Time (ms)	Rise Time (ms)	Down Time (ms)
Standard (default)	0	0	0	0
Stage	780	1100	1540	1660
TV	1180	1520	1860	1940
Architectural	1380	1730	2040	2120
Theatre	1580	1940	2230	2280
Stage 2	0	1100	0	1660

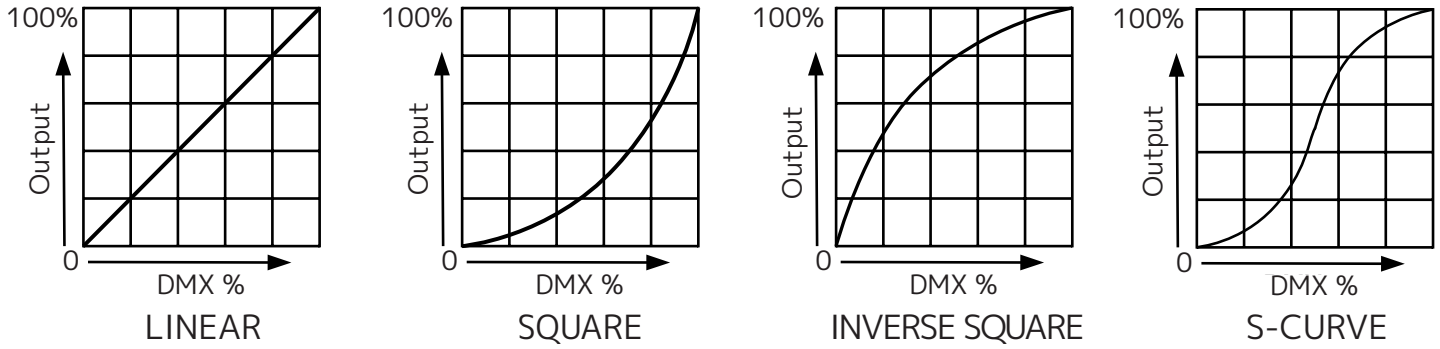

DMX SETUP

DMX-512: DMX is short for Digital Multiplex. This is a universal protocol used as a form of communication between intelligent fixtures and controllers. A DMX controller sends DMX data instructions from the controller to the fixture. DMX data is sent as serial data that travels from fixture to fixture via the DATA “IN” and DATA “OUT” XLR terminals located on all DMX fixtures (most controllers only have a DATA “OUT” terminal).

DMX Linking: DMX is a language allowing all makes and models of different manufacturers to be linked together and operate from a single controller, as long as all fixtures and the controller are DMX compliant. To ensure proper DMX data transmission, try to use the shortest cable path possible when linking several DMX fixtures. The order in which fixtures are connected in a DMX line does not influence the DMX addressing. For example, a fixture assigned a DMX address of 1 may be placed anywhere in a DMX line: at the beginning, at the end, or anywhere in the middle. When a fixture is assigned a DMX address of 1, the DMX controller knows to send DATA assigned to address 1 to that unit, no matter where it is located in the DMX chain.

Data Cable (DMX Cable) Requirements (For DMX Operation): This unit can be controlled via DMX-512 protocol. The DMX address is set on the rear panel of the unit. Your unit and your DMX controller require a standard 5-pin XLR connector for data input and data output. We recommend Accu-Cable DMX cables. If you are making your own cables, be sure to use standard 110-120 Ohm shielded cable (This cable may be purchased at almost all pro lighting stores). Your cables should be made with a male XLR connector at one end and a female XLR connector at the other. Also remember that DMX cable must be daisy chained and cannot be split.

Notice: Be sure to follow the illustration below when making your own cables. Do not use the ground lug on the XLR connector. Do not connect the cable’s shield conductor to the ground lug or allow the shield conductor to come in contact with the XLR’s outer casing. Grounding the shield could cause a short circuit and erratic behavior.

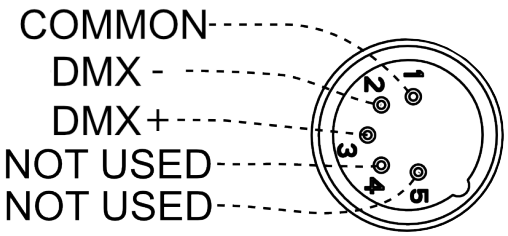

DMX SETUP

Special Note: Line Termination. When longer runs of cable are used, you may need to use a terminator on the last unit to avoid erratic behavior. A terminator is a 110-120 ohm 1/4 watt resistor which is connected between pins 2 and 3 of a male XLR connector (DATA + and DATA -). This unit is inserted in the female XLR connector of the last unit in your daisy chain to terminate the line. Using a cable terminator (ADJ part number Z-DMX/T) will reduce the risk of erratic behavior.

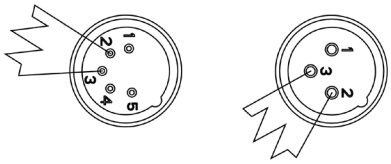

A DMX512 terminator reduces signal errors, avoiding most signal reflection interference. Connect PIN 2 (DMX-) and PIN 3 (DMX+) of the last fixture in series with a 120 Ohm, 1/4 W Resistor to terminate the DMX512.

DMX ADDRESSING.

All fixtures should be given a DMX starting address when using a DMX controller, so the correct fixture responds to the correct control signal. This digital starting address is the channel number from which the fixture starts to “listen” to the digital control signal sent out from the DMX controller. The assignment of this starting DMX address is achieved by setting the correct DMX address on the digital control display on the fixture.

You can set the same starting address for all fixtures or a group of fixtures, or set different addresses for each individual fixture. Setting all fixtures to the same DMX address will cause all fixtures to react in the same way. In other words, changing the settings of one channel will affect all the fixtures simultaneously.

If you set each fixture to a different DMX address, each unit will start to “listen” to the channel number you have set, based on the quantity of DMX channels of each fixture. That means changing the settings of one channel will only affect the selected fixture.

For example, when this unit is operating in 29 channel mode, you should set the starting DMX address of the first unit to 1, the second unit to 30 (1 + 29), the third unit to 59 (1 + 29 + 29), and so on. See the chart below for more details.

CHANNEL MODE	UNIT 1 ADDRESS	UNIT 2 ADDRESS	UNIT 3 ADDRESS	UNIT 4 ADDRESS
29ch	1	30	59	88
35ch	1	36	71	106
43ch	1	44	87	130

DMX TRAITS

MODE / CHANNELS			VALUES	FUNCTION
29ch	35ch	43ch		
1	1	1		**Pan**
			000 - 255	Pan Movement, 540/630
	2	2		**Pan Fine**
			000 - 255	Pan Fine Adjustment
2	3	3		**Tilt**
			000 - 255	Tilt Movement, 270
	4	4		**Tilt Fine**
			000 - 255	Tilt Fine Adjustment
3	5	5		**Continuous Pan**
			000 - 127	No Function
			128 - 190	Clockwise Rotation, slow to fast
			191 - 192	Stop
			193 - 255	Counter-clockwise Rotation, fast to slow
4	6	6		**Cyan**
			000 - 255	0% to 100%
		7		**Cyan Fine**
			000 - 255	0% to 100%
5	7	8		**Magenta**
			000 - 255	0% to 100%
		9		**Magenta Fine**
			000 - 255	0% to 100%
6	8	10		**Yellow**
			000 - 255	0% to 100%
		11		**Yellow Fine**
			000 - 255	0% to 100%
7	9	12		**Color Wheel 1**
			000 - 005	Open
			006 - 011	Open / Red
			012 - 017	Red
			018 - 023	Red / Blue
			024 - 029	Blue
			030 - 035	Blue / Green
			036 - 041	Green
			042 - 047	Green / Orange
			048 - 053	Orange
			054 - 059	Orange / Quad Color 1
			060 - 065	Quad Color 1
			066 - 071	Quad Color 1 / Lime
			072 - 077	Lime
			078 - 083	Lime / Amber
			084 - 089	Amber
			090 - 095	Amber / High CRI

DMX TRAITS

MODE / CHANNELS			VALUES	FUNCTION
29ch	35ch	43ch		
7	9	12		**Color Wheel 1 (continued)**
			096 - 101	High CRI
			102 - 107	High CRI / Congo Blue
			108 - 113	Congo Blue
			114 - 119	Congo Blue / Open
			120 - 185	Clockwise Color Wheel Rotation, fast to slow
			186 - 189	No Rotation
			190 - 255	Counter-clockwise Color Wheel Rotation, slow to fast
8	10	13		**Color Wheel 2**
			000 - 005	Open
			006 - 011	Open / Dark Red
			012 - 017	Dark Red
			018 - 023	Dark Red / Midnight Blue
			024 - 029	Midnight Blue
			030 - 035	Midnight Blue / Light Turquoise
			036 - 041	Light Turquoise
			042 - 047	Light Turquoise / Pink
			048 - 053	Pink
			054 - 059	Pink / UV
			060 - 065	UV
			066 - 071	UV / Quad Color 2
			072 - 077	Quad Color 2
			078 - 083	Quad Color 2 / Lavender
			084 - 089	Lavender
			090 - 095	Lavender / CTO 2700K
			096 - 101	CTO 2700K
			102 - 107	CTO 2700K / CTC
			108 - 113	CTC
			114 - 119	CTC / Open
			120 - 185	Clockwise Color Wheel Rotation, fast to slow
			186 - 189	No Rotation
			190 - 255	Counter-clockwise Color Wheel Rotation, slow to fast
	11	14		**Color Macros - CMY and Color Wheel**
			000 - 031	Off
			032 - 039	Macro 1
			040 - 047	Macro 2
			048 - 055	Macro 3
			056 - 063	Macro 4
			064 - 071	Macro 5
			072 - 079	Macro 6
			080 - 087	Macro 7

DMX TRAITS

MODE / CHANNELS			VALUES	FUNCTION
29ch	35ch	43ch		
				Color Macros - CMY and Color Wheel (continued)
			088 - 095	Macro 8
			096 - 103	Macro 9
			104 - 111	Macro 10
			112 - 119	Macro 11
			120 - 127	Macro 12
			128 - 135	Macro 13
			136 - 143	Macro 14
			144 - 151	Macro 15
			152 - 159	Macro 16
			160 - 167	Macro 17
	11	14	168 - 175	Macro 18
			176 - 183	Macro 19
			184 - 191	Macro 20
			192 - 199	Macro 21
			200 - 207	Macro 22
			208 - 215	Macro 23
			216 - 223	Macro 24
			224 - 231	Macro 25
			232 - 239	Macro 26
			240 - 247	Macro 27
			248 - 255	Random CMY
				Gobo Wheel 1
			000 - 009	Open
			010 - 019	Gobo 1
			020 - 029	Gobo 2
			030 - 039	Gobo 3
			040 - 049	Gobo 4
			050 - 059	Gobo 5
			060 - 069	Gobo 6
			070 - 079	Gobo 7
9	12	15	080 - 094	Gobo Shake 1, slow to fast
			095 - 109	Gobo Shake 2, slow to fast
			110 - 124	Gobo Shake 3, slow to fast
			125 - 139	Gobo Shake 4, slow to fast
			140 - 154	Gobo Shake 5, slow to fast
			155 - 169	Gobo Shake 6, slow to fast
			170 - 189	Gobo Shake 7, slow to fast
			190 - 221	Clockwise Gobo Wheel Rotation, fast to slow
			222 - 223	No Rotation
			224 - 255	Counter-clockwise Gobo Wheel Rotation, slow to fast

DMX TRAITS

MODE / CHANNELS			VALUES	FUNCTION
29ch	35ch	43ch		
10	13	16		**Gobo Wheel 1 Rotation**
			000 - 127	Gobo Indexing
			128 - 189	Clockwise Gobo Wheel Rotation, fast to slow
			190 - 193	No Rotation
			194 - 255	Counter-clockwise Gobo Rotation, slow to fast
	14	17		**Gobo Wheel 1 Index Fine**
			000 - 255	Fine gobo indexing
11	15	18		**Gobo Wheel 2**
			000 - 009	Open
			010 - 019	Gobo 1
			020 - 029	Gobo 2
			030 - 039	Gobo 3
			040 - 049	Gobo 4
			050 - 059	Gobo 5
			060 - 069	Gobo 6
			070 - 079	Gobo 7
			080 - 094	Gobo 1 Shake, slow to fast
			095 - 109	Gobo 2 Shake, slow to fast
			110 - 124	Gobo 3 Shake, slow to fast
			125 - 139	Gobo 4 Shake, slow to fast
			140 - 154	Gobo 5 Shake, slow to fast
			155 - 169	Gobo 6 Shake, slow to fast
			170 - 189	Gobo 7 Shake, slow to fast
			190 - 221	Clockwise Gobo Wheel Rotation, fast to slow
			222 - 223	No Rotation
			224 - 255	Counter-clockwise Gobo Wheel Rotation, slow to fast
12	16	19		**Gobo Wheel 2 Rotation**
			000 - 127	Gobo Indexing
			128 - 189	Clockwise Gobo Rotation, fast to slow
			190 - 193	No Rotation
			194 - 255	Counter-clockwise Gobo Rotation, slow to fast
	17	20		**Gobo Wheel 2 Index Fine**
			000 - 255	Fine gobo indexing
13	18	21		**Shutter**
			000 - 031	Shutter closed
			032 - 063	Shutter open
			064 - 095	Strobe, slow to fast
			096 - 127	Shutter open
			128 - 159	Pulse Effect, slow to fast
			160 - 191	Shutter open
			192 - 223	Random Strobe, slow to fast
			224 - 255	Shutter open

DMX TRAITS

MODE / CHANNELS			VALUES	FUNCTION
29ch	35ch	43ch		
14	19	22		**Dimmer**
			000 - 255	Intensity, 0% to 100%
		23		**Dimmer Fine**
			000 - 255	Fine dimmer intensity
15	20	24		**Prism 1**
			000 - 031	No Effect
			032 - 255	Prism 1
16	21	25		**Prism 1 Rotate and Index**
			000 - 127	Prism 1 Indexing
			128 - 189	Clockwise Rotation, fast to slow
			190 - 193	No Rotation
			194 - 255	Counter-clockwise Rotation, slow to fast
		26		**Prism 1 Index Fine**
			000 - 255	Fine 16-bit index
17	22	27		**Prism 2**
			000 - 031	No Effect
			032 - 255	Prism 2
18	23	28		**Prism 2 Rotate and Index**
			000 - 127	Prism 2 Indexing
			128 - 189	Clockwise Rotation, fast to slow
			190 - 193	No Rotation
			194 - 255	Counter-clockwise Rotation, slow to fast
		29		**Prism 2 Index Fine**
			000 - 255	Fine 16-bit index
19	24	30		**Prism/Gobo Macros**
			000 - 009	No Prism - Open
			010 - 019	Macro 1
			020 - 029	Macro 2
			030 - 039	Macro 3
			040 - 049	Macro 4
			050 - 059	Macro 5
			060 - 069	Macro 6
			070 - 079	Macro 7
			080 - 089	Macro 8
			090 - 099	Macro 9
			100 - 109	Macro 10
			110 - 119	Macro 11
			120 - 129	Macro 12
			130 - 139	Macro 13
			140 - 149	Macro 14
			150 - 159	Macro 15
			160 - 169	Macro 16
			170 - 179	Macro 17
			180 - 189	Macro 18
			190 - 199	Macro 19
			200 - 209	Macro 20
			210 - 219	Macro 21
			220 - 229	Macro 22
			230 - 239	Macro 23
			240 - 255	Macro 24

DMX TRAITS

MODE / CHANNELS			VALUES	FUNCTION
29ch	35ch	43ch		
20	25	31		**Focus**
			000 - 255	0% to 100%
		32		**Focus Fine**
			000 - 255	0% to 100%
21	26	33		**Zoom**
			000 - 255	Narrow to wide
		34		**Zoom Fine**
			000 - 255	Narrow to wide, 16-bit
22	27	35		**Medium Frost**
			000 - 255	0% to 100%
23	28	36		**Heavy Frost**
			000 - 255	0% to 100%
24	29	37		**Animation**
			000 - 019	No Function
			020 - 127	Enter in Proportion
			128 - 170	All on - All in - All out (fast to slow)
			171 - 213	Half open - Full access - Half open (fast to slow)
			214 - 255	Half open - All out - Half open (fast to slow)
25	30	38		**Animation Rotation**
			000	No Function
			001 - 127	Clockwise, fast to slow
			128	Stop
			129 - 255	Counter-clockwise, slow to fast
26	31	39		**Dimmer Mode**
			000 - 020	Default to Unit Setting
			021 - 040	Standard
			041 - 060	Stage
			061 - 080	TV
			081 - 100	Architectural
			101 - 120	Theatre
			121 - 140	Stage 2
			141 - 160	Dim Speed, fast to slow (0.1s to 10s)
			161 - 255	Default to Unit Setting
	32	40		**Dim Curves**
			000 - 020	No Function
			021 - 040	Linear
			041 - 060	Square
			061 - 080	Inv. Squa.
			081 - 100	S. Curve
			101 - 255	No Function

DMX TRAITS

MODE / CHANNELS			VALUES	FUNCTION
29ch	35ch	43ch		
27	33	41		**CMY and Color Macro Speed**
			000 - 255	Maximum to minimum
28	34	42		**Pan/Tilt Speed**
			000 - 225	Fast to slow
			226 - 235	Blackout by movement
			236 - 245	Blackout by all wheel changing
			246 - 255	No Function
29	35	43		**Special Functions**
			000 - 029	No Function
			030 - 039	Fan Control - Mute (hold 3s)
			040 - 049	Fan Control - Low (hold 3s)
			050 - 059	Fan Control - High (hold 3s)
			060 - 069	Fan Control - Auto (hold 3s)
			070 - 074	All Motor Reset
			075 - 079	Pan/Tilt Reset
			080 - 084	CMY Reset
			085 - 089	No Function
			090 - 094	Effect Reset 1 (color, gobo, animation)
			095 - 099	Effect Reset 2 (prism, frost, focus, zoom)
			100 - 142	No Function
			143 - 144	Pan/Tilt Speed Standard (hold 3s)
			145 - 146	Pan/Tilt Speed Fast (hold 3s)
			147 - 148	No Function
			149 - 150	Aria On (hold 3s)
			151 - 152	Aria Off (hold 3s)
			153 - 154	Hibernation Enable (hold 3s)
			155 - 156	Hibernation Off (hold 3s)
			157 - 158	Display Backlight On (hold 3s)
			159 - 160	Display Backlight Off (hold 3s)
			161 - 164	No Function
			165 - 166	Invert Pan On (hold 3s)
			167 - 168	Invert Pan Off (hold 3s)
			169 - 170	Invert Tilt On (hold 3s)
			171 - 172	Invert Tilt Off (hold 3s)

DMX TRAITS

MODE / CHANNELS			VALUES	FUNCTION
29ch	35ch	43ch		
29	35	43		**LED Refresh Rate (Hz)**
			173	900
			174	910
			175	920
			176	930
			177	940
			178	950
			179	960
			180	970
			181	980
			182	990
			183	1000
			184	1010
			185	1020
			186	1030
			187	1040
			188	1050
			189	1060
			190	1070
			191	1080
			192	1090
			193	1100
			194	1110
			195	1120
			196	1130
			197	1140
			198	1150
			199	1160
			200	1170
			201	1180
			202	1190
			203	1200
			204	1210
			205	1220
			206	1230
			207	1240
			208	1250
			209	1260
			210	1270
			211	1280
			212	1290
			213	1300

DMX TRAITS

MODE / CHANNELS			VALUES	FUNCTION
29ch	35ch	43ch		
				LED Refresh Rate (Hz) (continued)
			214	1310
			215	1320
			216	1330
			217	1340
			218	1350
			219	1360
			220	1370
			221	1380
			222	1390
			223	1400
			224	1410
			225	1420
			226	1430
			227	1440
			228	1450
			229	1460
			230	1470
			231	1480
29	35	43	232	1490
			233	1500
			234	2500
			235	4000
			236	5000
			237	6000
			238	10,000
			239	15,000
			240	20,000
			241	25,000
			242	Internal Program 1
			243	Internal Program 2
			244	Internal Program 3
			245	Internal Program 4
			246	Internal Program 5
			247	Internal Program 6
			248	Internal Program 7
			249	Internal Programs Off
			250 - 252	Enable CT Mode
			253 - 255	Disable CT Mode

REMOTE DEVICE MANAGEMENT (RDM)

NOTE: In order for RDM to work properly, RDM enabled equipment must be used throughout the entire system, including DMX data splitters and wireless systems.

Remote Device Management (RDM) is a protocol that sits on top of the DMX512 data standard for lighting, allowing the DMX systems of the fixtures to be modified and monitored remotely. This proto-col is ideal for instances in which a unit is installed in a location that is not easily accessible.

With RDM, the DMX512 system becomes bi-directional, allowing a compatible RDM enabled con-troller to send out a signal to devices on the wire, as well as allowing the fixture to respond (known as a *GET* command). The controller can then use its *SET* command to modify settings that would typically have to be changed or viewed directly via the unit's display screen, including the DMX Address, DMX Channel Mode, and Temperature Sensors.

FIXTURE RDM INFORMATION:

RDM Code	Device ID	Device Model ID	Personality ID
0x1900	Generate by MCU ID	0x0012	Basic 29 (1); Standard 35 (2); Extended 43 (3); User Mode (4)

Please be aware that not all RDM devices support all RDM features, and therefore it is important to check beforehand to ensure that the equipment that you are considering includes all of the fea-tures that you require.

Code	Parameter
0x0001	Disc Unique Branch
0x0002	Disc Mute
0x0003	Disc Un Mute
0x0050	Supported Parameters
0x0051	Parameter Description
0x0060	Device Info
0x00C0	Software Version Label
0x00F0	DMX Start Address
0x1000	Identify Device
0x0080	Device Model Description
0x0081	Manufacturer Label
0x0082	Device Label
0x00E0	DMX Personality
0x00E1	DMX Personality Description
0x0400	Device Hours
0x0600	Pan Invert
0x0601	Tilt Invert
0x0602	Pan Tilt Swap

PRIMARY-SECONDARY SETUP

This function allows you to link units together to run in a Primary-Secondary set-up, in which one unit will act as the controlling unit and the others will react to the controlling unit's built-in programs. Any unit can be configured to act as a Primary or as a Secondary, but only one unit in a given system can be programmed to act as the Primary.

Primary-Secondary Connections and Settings:

1. Daisy chain your units via the XLR connectors on the rear panels of each unit. Use standard XLR data cables to link your units together. Remember that the male XLR connector is the input and the female XLR connector is the output. The first unit in the chain (primary) will use the female XLR connector only. The last unit in the chain will use the male XLR connector only.
2. Use the display screen and control panel to navigate to Personality > Prim/Sec Mode. Select this sub-menu using the ENTER button, and use the UP and DOWN buttons to toggle between "Primary" and "Secondary". Press ENTER to confirm your selection.
3. Repeat Step 2 for each unit in the system. Make sure that only one unit is designated as the Primary, while all other units are designated as Secondaries.
4. The secondary units will now follow the behavior of the primary unit.

NOTES:

- Only one unit should be configured as the primary, while all the other units should be configured as secondaries.
- All units should be set to the same DMX channel mode.
- If fixtures fail to sync, verify that all settings mentioned above are the same, then power all devices off, then switch them on again to re-establish the link.

MULTI-UNIT POWER LINKING

This feature allows you to connect the fixtures to one another using the power cable input and output sockets.

The maximum number of units that can be linked in this manner is as follows:

- **2 units when running on 120V power.**
- **5 units when running on 230V power.**

DO NOT EXCEED THIS MAXIMUM NUMBER WHEN POWER LINKING UNITS!

All linked units must be of the same make and model type. Do not mix and match units!

MAINTENANCE GUIDELINES

DISCONNECT POWER BEFORE PERFORMING ANY MAINTENANCE!

CLEANING

Frequent cleaning is recommended to ensure proper function, optimized light output, and an extended life. The frequency of cleaning depends on the environment in which the fixture operates: damp, smoky, or particularly dirty environments can cause greater accumulation of dirt on the fixture's optics. Clean the external lens surface regularly with a soft cloth to avoid dirt/debris accumulation.

NEVER use alcohol, solvents, or ammonia-based cleaners.

MAINTENANCE

Regular inspections are recommended to ensure proper function and extended life. There are no user serviceable parts inside this fixture. Please refer all other service issues to an authorized ADJ service technician. Should you need any spare parts, please order genuine parts from your local ADJ dealer.

Please refer to the following points during routine inspections:

A. A detailed electrical check by an approved electrical engineer every three months, to make sure the circuit contacts are in good condition and prevent overheating.
B. Be sure all screws and fasteners are securely tightened at all times. Loose screws may fall out during normal operation, resulting in damage or injury as larger parts could fall.
C. Check for any deformations on the housing, color lenses, rigging hardware, and rigging points (ceiling, suspension, trussing). Deformations in the housing could allow for dust to enter into the fixture. Damaged rigging points or unsecured rigging could cause the fixture to fall and seriously injure a person(s).
D. Electric power supply cables must not show any damage, material fatigue, or sediments.

FUSE REPLACEMENT

Disconnect the fixture from its power source. Locate the fuse, which is on the back of the fixture base near the power and data ports. Remove the fuse and replace with a fresh fuse. **Always use a fuse of the same 6.3A / 250V rating for replacement.**

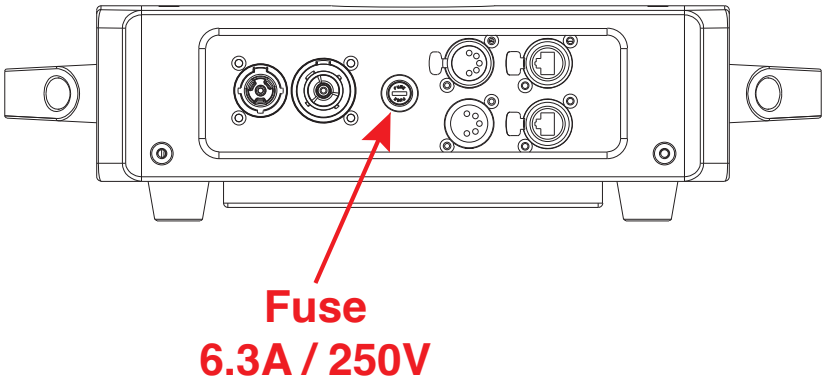

ERROR CODES

ERROR GROUP	ERROR CODE
Encoder Error	Pan Encoder Error
	Tilt Encoder Error
Sensor Error	Pan Sensor Error
	Tilt Sensor Error
	Cyan Sensor Error
	Magenta Sensor Error
	Yellow Sensor Error
	Color Wheel 1 Sensor Error
	Color Wheel 2 Sensor Error
	Gobo Wheel 1 Sensor Error
	Gobo Wheel 1 Rotation Sensor Error
	Gobo Wheel 2 Sensor Error
	Gobo Wheel 2 Rotation Sensor Error
	Prism 1 Sensor Error
	Prism 2 Sensor Error
	Prism 2 Rotate & Index Sensor Error
	Focus Sensor Error
	Zoom Sensor Error
Communication Error	CPU-B Error
	CPU-C Error
	CPU-D Error
Net Error	Net Communication Error
	Net Protocol Error
	Net Model Mismatch Error
Temp Error	Temp High Error
	Temp Sensitive Error
Fan Error	Head Fan Error
	Base Fan Error
EEPROM Error	EEPROM Error

SPECIFICATIONS

Type: 350W White LED Moving Head Spot

SOURCE
- 350W White LED Engine
- Color Temperature: 8000K (±250K)
- 20,000 Hour Average LED Life*

*May vary depending on several factors including but not limited to: Environmental Conditions, Power/Voltage, Usage Patterns (On-Off Cycling), Control, and Dimming.

PHOTOMETRIC DATA
- 18,000 Lumens
- CRI: 70

COLOR
- Disc-Based CMY Color Mixing
- 2× Color Wheels (9 colors per wheel)
- Color Wheel 1: Red, Blue, Green, Orange, Quad Color 1, Lime, Amber, High CRI, Congo Blue
- Color Wheel 2: Dark Red, Midnight Blue, Light Turquoise, Pink, UV, Quad Color 2, Lavender, CTO 2700K, CTC (Color Temp. Correction)

GOBOS
- 2× Rotating Gobo Wheels: Each with 7 interchangeable glass gobos (OD: 23 mm, Image: 14.8 mm)

EFFECTS
- Motorized Zoom: 3.8° to 44°
- 2× Prisms: 1× 6 Facet Linear and 1× 6 Facet Circular (Overlay Capable)
- 2× Frost Filters: 1× Light Frost and 1× Heavy Frost
- Animation Wheel on Movable Arm
- Motorized Focus
- 1 Hz–10 Hz Strobe Rate (Electronic)

CONTROL / CONNECTIONS
- (3) DMX Channel Modes (Basic 29 / Standard 35 / Extended 43) plus User Mode
- DMX, sACN, Art-Net, and RDM
- Aria X2 Wireless Management System
- NFC System
- 6 Button Touch Control Panel
- Full Color 180° Reversible LCD Menu Display
- 8 / 16 Bit Resolution Adjustable Movement
- RJ45 In/Thru Ports
- 5-pin XLR DMX In/Out
- Locking Power In/Out

PAN / TILT
- Pan: 540°/630° and separate 360° Continuous Pan Rotation
- Tilt: 270°
- Pan/Tilt Locks
- 3 Phase Motors

SIZE / WEIGHT
- Length: 14.5” (368 mm)
- Width: 9.8” (248 mm)
- Vertical Height: 22.3” (567 mm)
- Weight: 48.5 lbs. (22 kg)

ELECTRICAL / THERMAL
- AC 100–240 V, 50/60 Hz
- Max Power Consumption: 675 W (5.9 A @ 120 V, 3.07 A @ 230 V)
- Power Linking: 2 units @ 120 V, 5 units @ 230 V
- Ambient Operating Temperature: 14°F to 113°F (–10°C to 45°C)

APPROVALS / RATINGS
- CE, FCC, cETLus (Pending), IP20

INCLUDED ACCESSORIES
- (1) Locking Power Cable (6.5 ft)
- (2) Omega Brackets (107 mm)
- (1) Safety Cable, 3 mm (1.97 ft)

ROAD CASE
- (2) Protégé XM fixtures fit in the ADJ DRC MHX Road Case

Specifications and documentation subject to change without notice.

DIMENSIONAL DRAWINGS

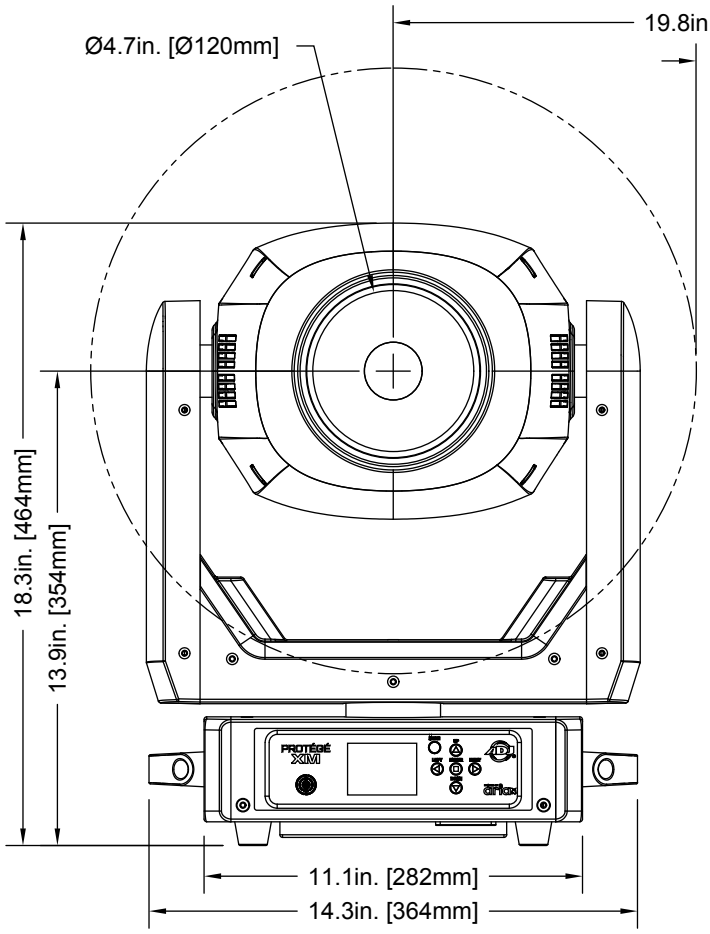

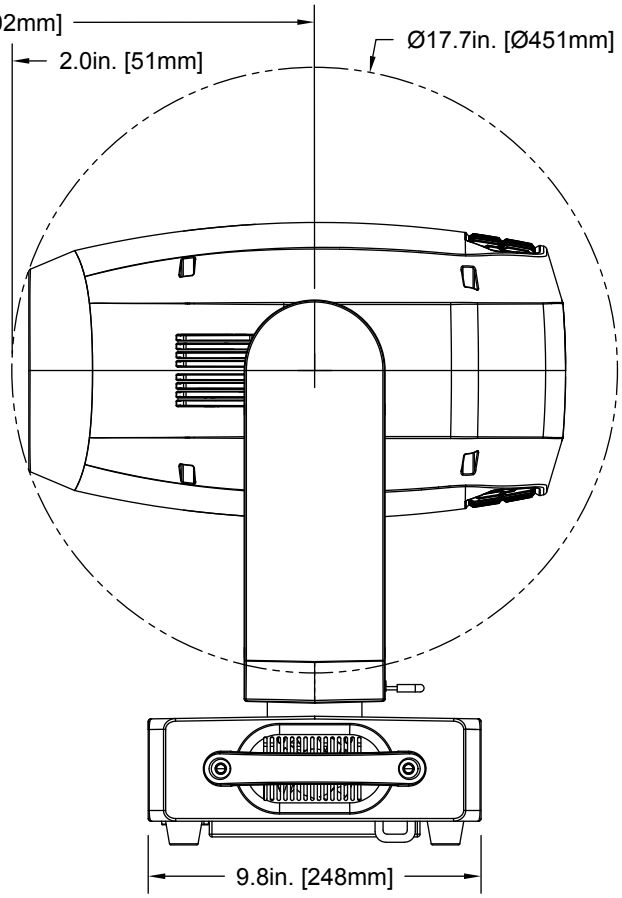

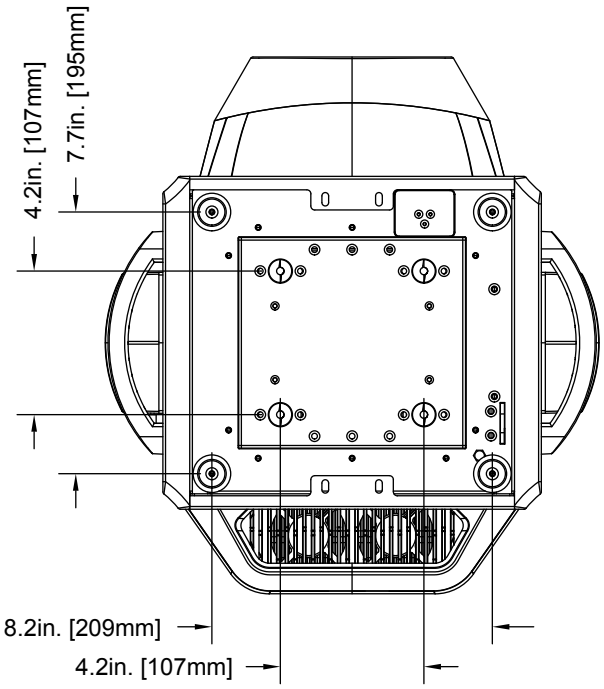

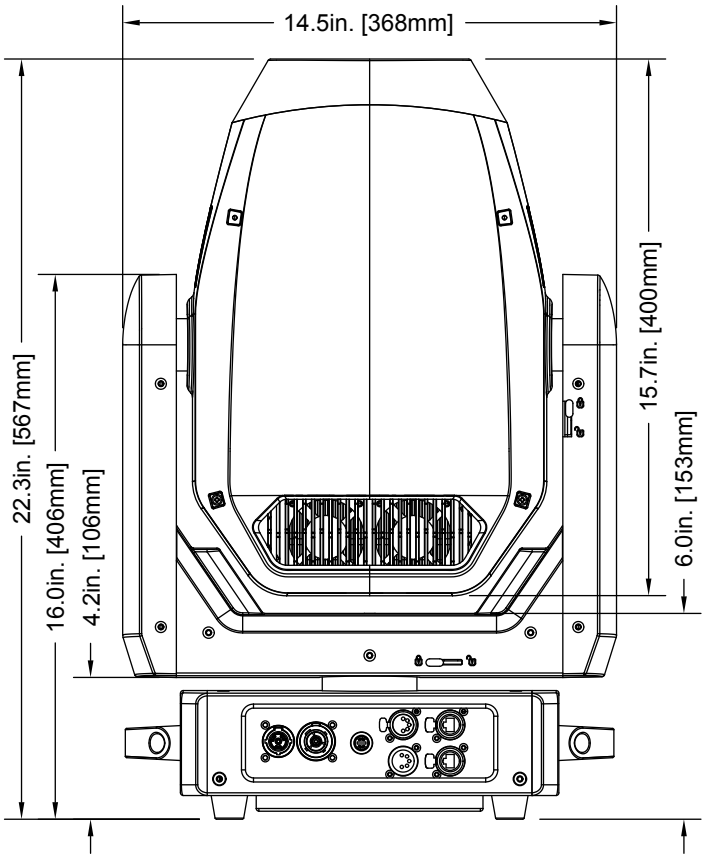

ORDERING INFORMATION

SKU (US)	SKU (EU)	DESCRIPTION
PRO500	Pending	ADJ Protégé XM

FCC STATEMENT

Please note that changes or modifications to this product that have not been expressly approved by the party responsible for compliance could void the user's authority to operate the equipment.

NOTE: This equipment has been tested and found to comply with the limits for a Class A digital device, pursuant to part 15 of the FCC Rules. These limits are designed to provide reasonable protection against harmful interference when the equipment is operated in a commercial environment. This equipment generates, uses, and can radiate radio frequency energy and, if not installed and used in accordance with the instruction manual, may cause harmful interference to radio communications. Operation of this equipment in a residential area is likely to cause harmful interference in which case the user will be required to correct the interference at his own expense.

Energy Saving Matters (EuP 2009/125/EC)

Saving electric energy is a key to help protecting the environment. Please turn off all electrical products when they are not in use. To avoid power consumption in idle mode, disconnect all electrical equipment from power when not in use. Thank you!

INDEX

Aria Setup and Guidelines 18
Ambient Operating Temperature 7, 14
Animation Wheel 10
Approvals / Ratings 43
Aria X2 6, 18, 22
Art-Net 22, 28, 43

Bluetooth 22

Clamp Mounting 15
CMY Color Mixing 6, 10
Color Wheel 1 10, 30
Color Wheel 2 10, 30
Colors and Gobos 10
Connections 9, 43
Continuous Pan 6, 30
Control Panel 9, 22
Customer Support 4

Dimensional Drawings 44
Dimmer Curves 27
Dimmer Modes 27
Display 9, 22
DMX Address 22, 28
DMX Channel Modes 22, 30
DMX Setup 28
DMX Traits 30
Document Version 2

Error Codes 42

FCC Statement 45
Features 6
Flammable Materials 7, 16
Frost Filters 6, 10
Fuse Replacement 41

Gobo Replacement 11
Gobo Wheels 10, 11
Gobos 10

Hibernation 22

Included Items 6
Information 4
Installation Guidelines 14
IP20 6, 43

Key Lock 22

LED Engine 6, 43
Limited Warranty 4

Maintenance Guidelines 41
Mounting Positions 16
Multi-Unit Power-Linking 40

Near Field Communication (NFC) 9, 21
Network Settings 22

Optional Accessories 45
Overview 9

Pan / Tilt Locks 9
Pan Movement 6, 30, 43
Power Linking 40
Primary-Secondary Setup 40
Prisms 6, 10
Product Registration 5

Remote Device Management (RDM) 39
Reset Motors 22
RJ45 9, 43

sACN 22, 28, 43
Safety Cable 9, 15
Safety Guidelines 7
Screen Lock 22
Software Update 22
Specifications 43
Strobe 6, 30
System Menu 22

Tilt Movement 6, 30, 43

User Mode 22, 30

Warranty 4

Zoom 6, 43