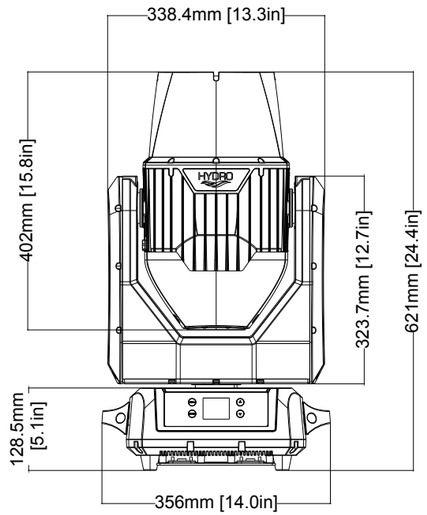

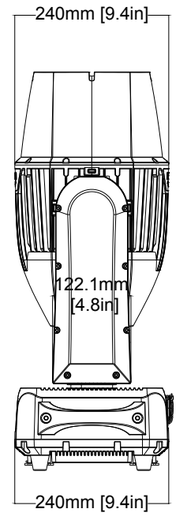

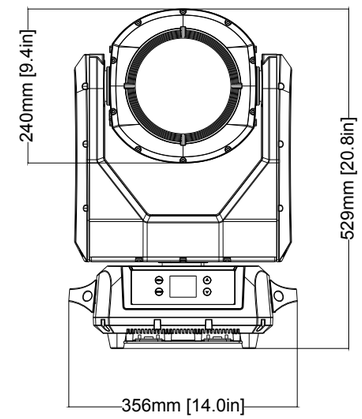

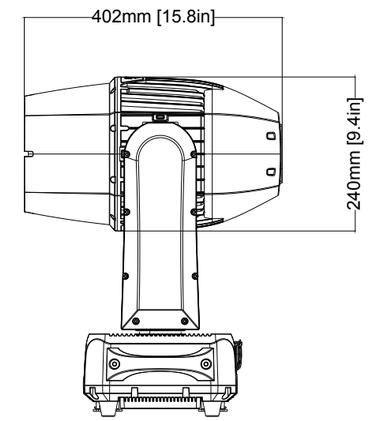

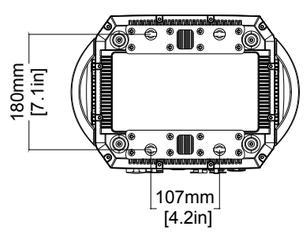

TITLE:				DATE:
ADJ Hydro Beam X12				27-Oct-2022
SCALE:	TOL:	.XX(.X)	.XXX(.XX)	ANGLE:
NONE	±	-	-	-